THE INTERNATIONAL MAGAZINE FOR ELECTRONICS ENTHUSIAST
November 1990
UK £1·75

RS

Elektor Electronics

Digital capacitance meter
Active mini sub-woofer
The miser's T/R loop
Smoke detector
1-of-*N* decoder
Solar-powered MW radio

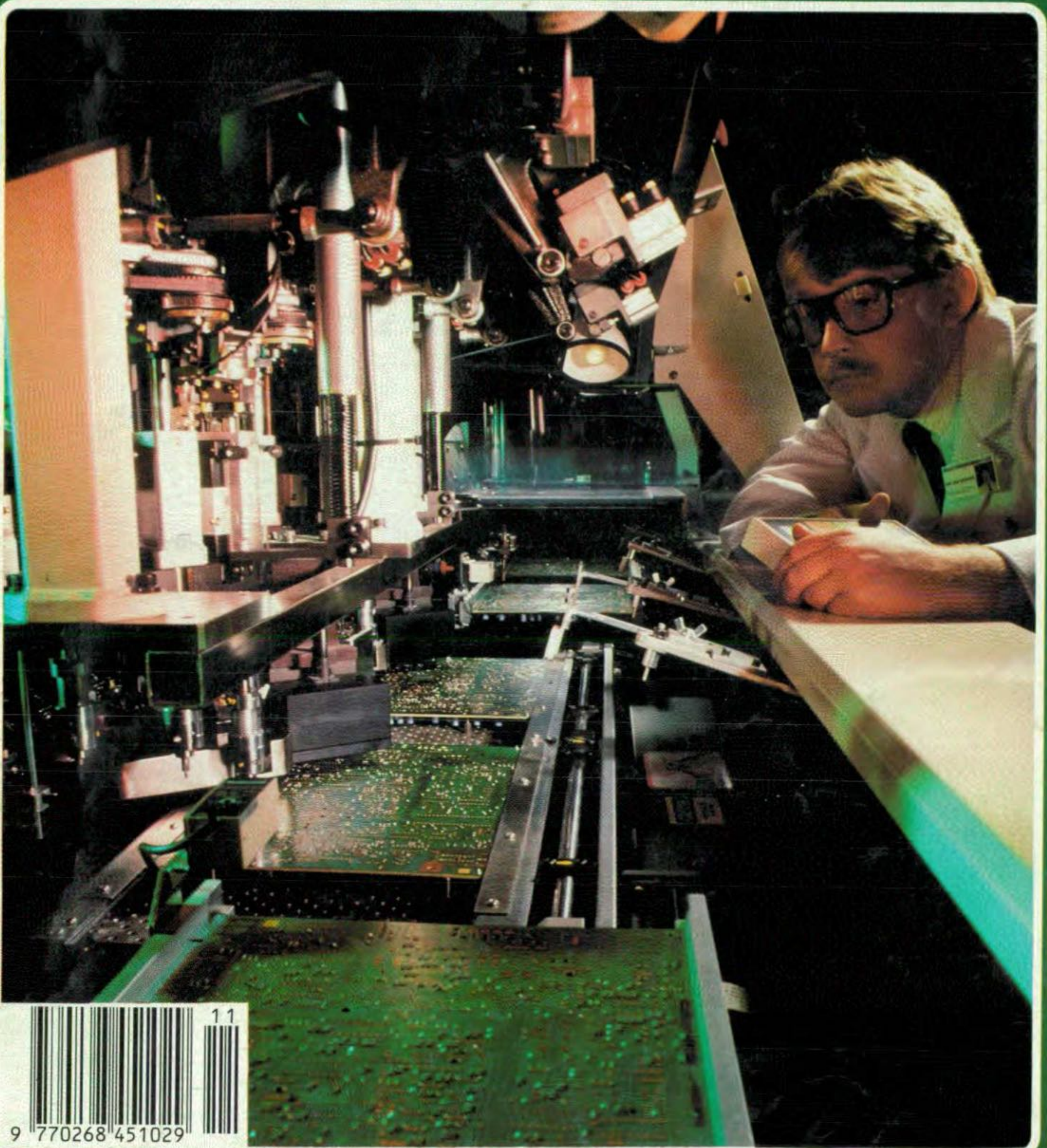

11
9 770268 451029

Elektor Electronics

CONTENTS

November 1990
Volume 16
Number 183

In our next issue:

- 36-PAGE SUPPLEMENT OF CONSTRUCTION PROJECTS
- Chopper opamps
- Metal transmission lines
- Line pulse fundamentals
- Advanced input stage
- Milliohm meter
- Measuring techniques (2)
- PC video text decoder

Front cover

Five years ago, the Welsh company Race Electronics faced disaster. Around the world, the market for home computers had collapsed and 90 per cent of the company's turnover was tied to their production.

Today, Race has grown from a company with an annual turnover of £3 million to one with £100 million and claims to be Europe's leading contract manufacturer of electronic assemblies. It is a major success story in an area of South Wales that has faced large-scale restructuring of its traditional coal mining and steel making industries.

Printed-circuit board assemblies are now used in domestic, industrial and office equipment.

In the photograph, a technician is seen programming complex computer-controlled equipment used to assemble components on to PCBs. This equipment is capable of picking up and placing components at rates of up to 25 000 an hour, selecting from up to 100 different types of component at any one time.

Race Electronics, Race House, Lanelay Road Industrial Estate, Talbot Green, Pontyclun, Mid Glamorgan CF7 8YY

LEADER

11 Forging links with fibre

APPLICATION NOTES

54 Stereo bridge amplifier with TDA7370
an SGS-Thomson application

AUDIO & HI-FI

26 **PROJECT**: Dubbing mixer – Part 2
an ELV design
44 **PROJECT**: Medium-power AF amplifier – Part 2
by T. Giffard
48 **PROJECT**: Active mini subwoofer
by T. Giffard

COMPUTERS & MICROPROCESSORS

40 **PROJECT**: Programmer for 8751
by O. Bailleux

DESIGN IDEAS

53 1-of-*N* decoder
by G. Sankaran

GENERAL INTEREST

14 **PROJECT**: Smoke detector
from an idea by R. Lucassen
30 In quest of a pangram – Part 4 (final)
by Lee C.F. Sallows
36 **PROJECT**: PT-100 thermometer
by J. Ruffell

POWER SUPPLIES

20 **PROJECT**: 400-watt laboratory power supply (2)
by G. Boddington

RADIO & TELEVISION

33 **PROJECT**: The miser's T/R loop antenna
52 **PROJECT**: Solar-powered MW radio
by M.S. Dhingra

TEST & MEASUREMENT

16 **PROJECT**: Digital capacitance meter
by E. Barrow

MISCELLANEOUS INFORMATION

Electronics scene **12**; Events **13**; New products **57** & **58**; Letters **60**; Switchboard **61**; New books **62**; Readers services **63**; Terms of Business **64**; Index of advertisers **74**.

Profile of
STEWART OF READING
on page 59.

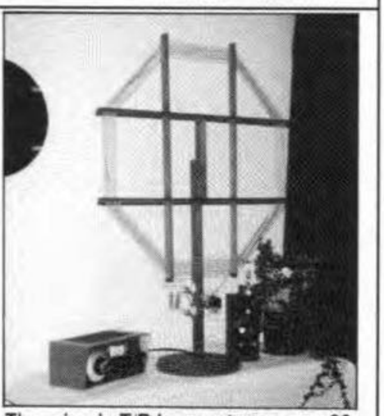

The miser's T/R loop antenna – p. 33

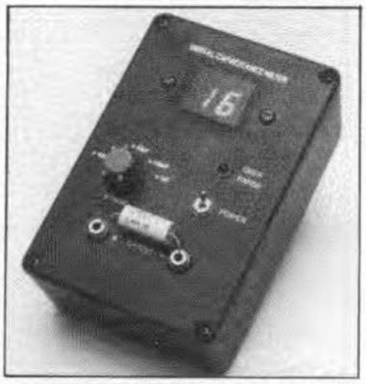

Digital capacitance meter – p. 16

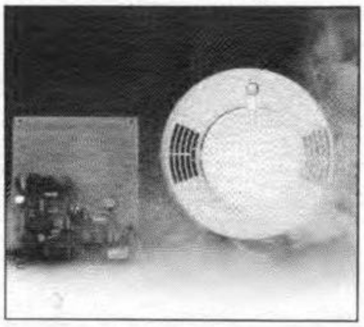

Smoke detector – p.14

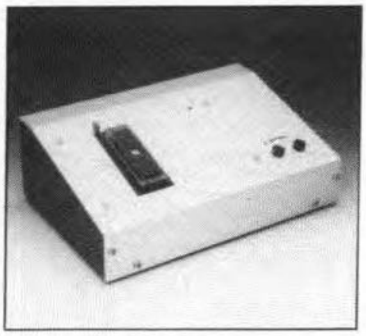

Programmer for the 8751 – p. 40

SMOKE DETECTOR

Although modern construction methods have significantly reduced the risk of a building burning down to the ground, any fire can cause considerable damage. Since fire prevention is a matter of interest for all of us, we present a low-cost smoke detector that signals the start of a fire.

from an idea by R. Lucassen

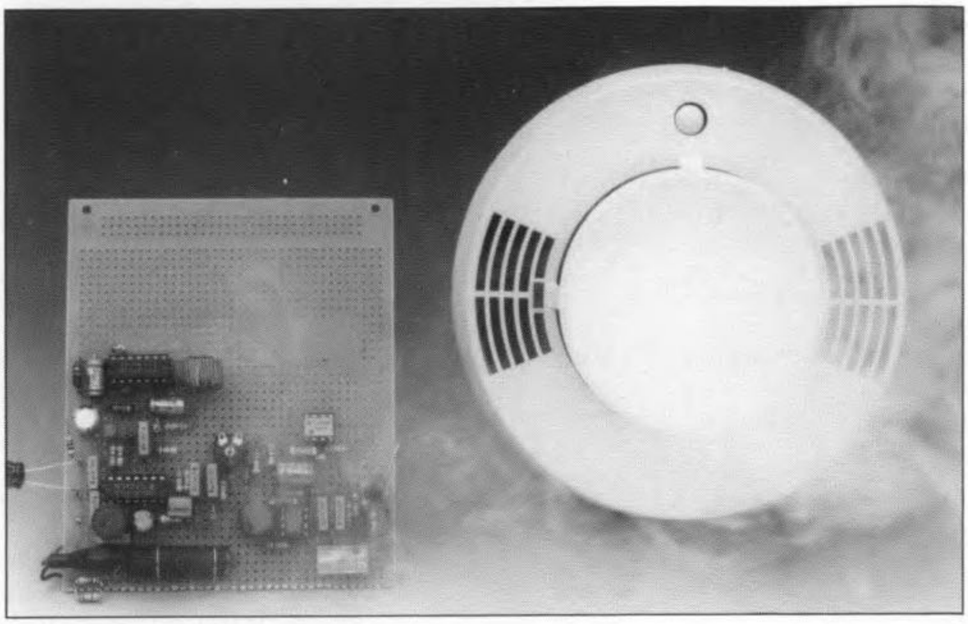

FIRE, as we all know, is extremely dangerous, and it is surprising how little is actually done to prevent it in, say, a modern home. This is in contrast to industrial buildings and offices where complex fire detection and fire extinguishing equipment is installed. Most, if not all, offices these days have at least the minimum (legally required) equipment in the form of one or two fire extinguishers. In many houses, however, the means to extinguish a fire in its early stages are limited to a few buckets of water. And to think that there are a good many potential fire sources in the modern home: a stove can overheat, a frying pan can catch fire, or a short-circuit can start a fire via the electrical wiring. Burning cigarette ends are also notorious causes of serious fires. In short, more attention should be paid to fire prevention.

Preventive measures, such as the use of flame-retardant materials, can be reinforced by the installation of reliable fire detectors at a number of locations in the home. The optical smoke detector presented here is such a detector.

No smoke without fire

Since almost any fire is marked by a lot of (suffocating) smoke, most fire detectors are based on the principle of smoke detection. Basically, two types of smoke detector exist: types with a radio-active sensor, and types with an optical sensor. The latter is used here, since it is reliable and safe. Smoke sensors with a radio-active isotope are less suitable, we feel, for use in a circuit for home construction since they are difficult to obtain, and require special handling precautions. Moreover, the safe disposal of the radioactive material forms a real problem when the sensor is used up.

The optical sensor used here is inexpensive and simple to build. In fact, it is made from a few pieces of scrap material, an infrared emitting diode (IRED), and two common photodiodes. When built with care and precision, this sensor is at least equal to commercial types as regards sensitivity and reliability.

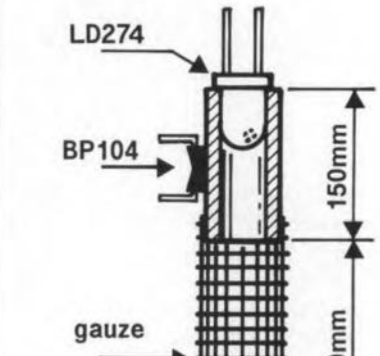

Fig. 1. Construction of the infra-red barrier that forms the sensor of the smoke detector.

Construction of the sensor

The sensor is housed in a transparent ballpoint holder. Figure 1 shows the general construction of the device. The sensor is based on the principle that smoke attenuates infrared (IR) light transmitted through air. The higher the smoke density, the lower the IR light intensity on the photodiode. The transmitter, an IRED Type LD274, is fitted in an approximately 1.5-cm long piece of the ballpoint holder. The inside diameter of the holder may have to be drilled out to enable the IRED to be seated firmly. The photodiode is fitted in a similar manner at the end of a 3-cm long tube section which is made light-resistant with a piece of heat-shrink sleeving or black self-adhesive tape. This is not necessary for the transmitter tube, although a few pieces of heat-shrink sleeving may be used to give it the same diameter as the receiver tube. This is done mainly to enable the two tubes to be fitted face to face on a small piece of stripboard, which also accommodates the electronic circuit. Do not make the transmitter tube light-resistant over the full length, since an additional photodiode must be mounted on it to function as a reference device. This diode is fitted at the outside of the transmitter tube, in direct optical contact with the IRED.

The two tubes are fitted on the circuit board at a distance of about 3 cm. To prevent flying insects interrupting the IR beam and causing false alarms, the space between the

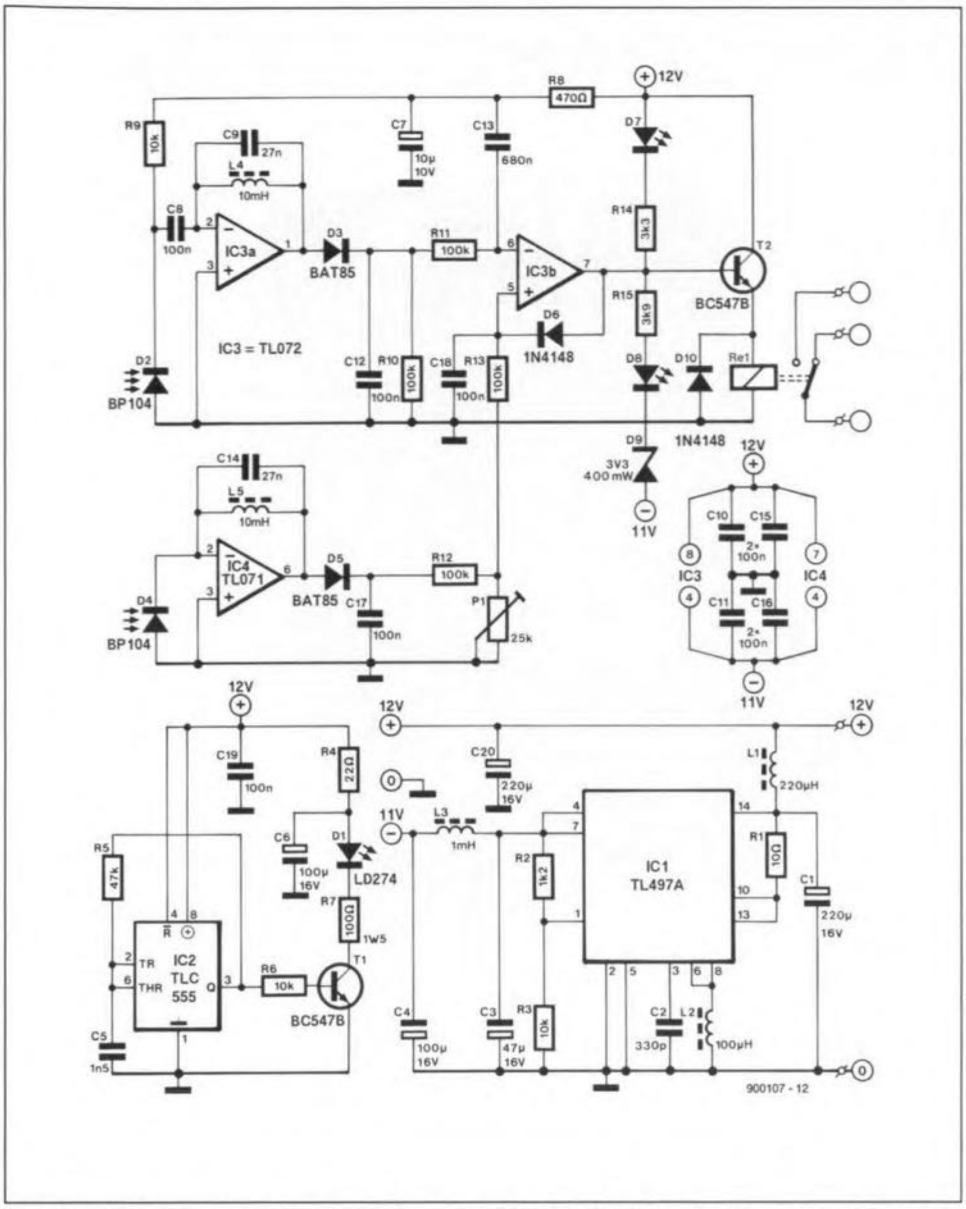

Fig. 2. Circuit diagram of the optical smoke detector. A relay output is provided for ready connection to an existing alarm system.

tubes is screened with a fine wire mesh.

The circuit

The sensitivity of a circuit designed for use as an electronic signalling device requires careful consideration. If the circuit is made too sensitive, false alarms will be generated by the dozen. Conversely, if the sensitivity is too low, a hazardous situation is signalled too late for the necessary action to be taken and prevent further damage. Hence, the design of the smoke sensor must meet demands which are stricter than many other electronic circuits of similar complexity.

The circuit diagram of the smoke detector is shown in Fig. 3. The TL497A in the bottom right-hand corner of the diagram forms part of a compact voltage inverter that converts the +12 V supply voltage into one of −11 V. This allows the symmetrically powered circuit to be used with a single 12-V mains power supply, which may be combined with a rechargeable (emergency) battery.

The optical sensor consists of a transmitter diode and two receiver diodes. The transmitter is driven by a rectangular voltage, which causes it to emit pulsating infra-red light. A pulsating beam is used here instead of a steady one to allow the receiver to be AC-coupled. After a few experiments with a DC-coupled system, this was found to confirm, in a negative sense, the dependency of the IR beam intensity on temperature. As a result, the DC-coupled receiver produced many spurious alarms even on small changes of the ambient temperature. After changing the system into an AC-coupled version, it proved largely immune to temperature variations, mainly because the effect of low-frequency voltage changes is eliminated by filters.

An *L-C* filter is used to limit the bandwidth of the receiver and so render it insensitive to noise and pulse-type interference. Circuit IC2, a Type 555, is set up as an astable multivibrator to provide the switching pulses to the IRED via transistor T1. The pulse frequency used here is about 10 kHz.

The circuit diagram shows two receivers, built around photodiodes D2 and D4. The first, D2, receives the infra-red beam via the smoke slot. The intensity of the incident IR light on the photodiode drops when the beam is attenuated by smoke resulting from fire. The other photodiode, D4, forms a reference device. The IR light intensity it receives is, in principle, fixed, since it is fitted quite close to the IRED, so that the extra beam attenuation caused by smoke is negligible. Since the output signal of D4 is used to provide a reference level in the circuit, the temperature dependence of the transmitter diode has no effect on its operation. When the temperature changes, the reference level changes with it. Note, however, that the output of the IRED drops when the temperature rises. The comparator in the detector compares the output levels of the two amplifiers. When the balance between the two is upset, the circuit produces a smoke alarm.

The amplifier with photodiode D2 is made much more sensitive than that with D4, because the intensity of the IR light it receives is much lower. The sensitivity is determined by R8 and R9. Because of the higher bias voltage across the diode, the light intensity required for a considerable photocurrent is relatively low. Capacitor C7 suppresses spurious pulses produced by, for instance, the switching power supply, the refrigerator, or the vacuum cleaner.

Amplifiers IC3A and IC4 are followed by two simple rectifiers composed of D3-C12-R10 and D5-C17-R12-P1 respectively. The direct voltages provided by these rectifiers are directly related to the measured IR light intensity. The output signals are compared by IC3B, whose output switches a relay via transistor T2.

Two LEDs are used to indicate the state of the smoke detector. The stand-by state is indicated by D7, and the smoke alarm state by D8. Preset P1 determines the level at which the comparator toggles. The higher the sensitivity, the less smoke required to actuate the relay.

Construction

The circuit is easily built on a piece of veroboard or stripboard. When determining the positions of the components on the board, make sure that all ground connections are kept as short as possible, and that the switching power supply is located well away from the input stages. Inductors L4 and L5 should have an internal resistance smaller than 10 Ω. In the prototype, Toko types from the 10RB series were used with good results. The low internal resistance is required to ensure a sufficiently high *Q* (quality-) factor of the *L-C* filter. A low *Q* factor increases the bandwidth and the receiver's susceptibility to noise.

For best results, it may be worth while to experiment with the distance between the two tubes that form the sensor.

Test the circuit by blowing a little cigarette or cigar smoke over the sensor. We found that the sensitivity of the circuit was optimum with P1 adjusted such that the relay is just not energized. Since the relay used has a normally closed and a normally open contact, the smoke detector is readily taken up into almost any larger alarm system via a two-wire connection. ■

DIGITAL CAPACITANCE METER

Have you just invested in a large bag of capacitors with incomprehensible, little or no markings? Then read on. The instrument described here has five capacitance ranges covering a total range of 100 pF to 100μF, can be powered from a single 9-V battery, and has a built-in over-range indicator to prevent ambiguous readings. So, build this capacitance meter before even opening your bag…

E. Barrow

UNMARKED capacitors can be bought very cheaply, but they often remain unused for years because one is not certain of their value. A low-cost capacitance meter to check out the values quickly and with acceptable accuracy is described here. The instrument is simple to build and based on commonly available components.

A bit of theory

If mathematics gives you a migraine you might like to skip this section and jump to the bottom line.

Consider a capacitor *C* charging through a resistor *R* from a supply voltage U_s as shown in Fig. 1.

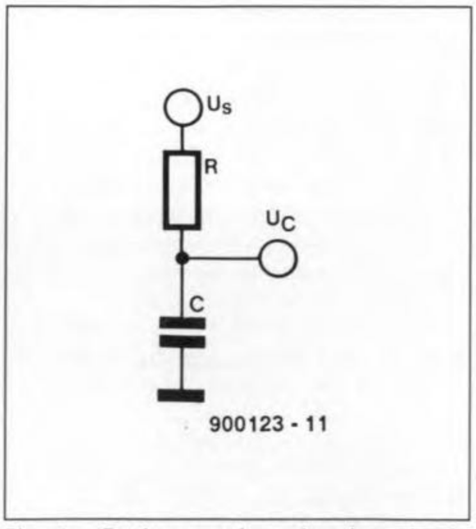

Fig. 1. Basic capacitor charging circuit. Both U_s and U_c are measured w.r.t. ground.

The voltage on the capacitor, U_c, may be written as

$$U_c = U_s(1 - e^{-t/RC})$$

where *e* is the base of natural logarithms, or 2.718282. Rearranging,

$$1 - \frac{U_c}{U_s} = e^{-t/RC}$$

rearranging and taking natural logarithms

$$R \ln\left(\frac{U_s}{U_s - U_c}\right) = \frac{t}{C}$$

If we make *R*, U_s and U_c constants, then the left-hand side of the equation becomes a constant term. So,

$$\frac{t}{C} = \text{constant} \qquad \text{or} \qquad C = k\,t$$

In other words, by measuring the time taken for an unknown capacitor to be charged to a certain voltage by a fixed potential (see Fig. 2), we can calculate its capacitance if we know the value of *k*. An even better way is to set the value of *k* to some round number by altering *R*. This allows us to measure the charge time and take this value directly as capacitance.

To cover wider values, range switching is done by changing the charging resistor, and so *k*, by a factor of 10. To keep the resistance within manageable levels, i.e., between 1 kΩ and 1 MΩ, we also switch the clock frequency used to measure the charge time to 1/100th of its value. Thus we get a total range of 5 decades.

The main problem comes when we measure electrolytic and tantalum bead capacitors. These tend to have relatively large leakage currents as their dielectrics are not good insulators like, for instance, polystyrene. So, as the idea postulated by Fig. 1 no longer holds true, it has to be redrawn as in Fig. 3.

To eliminate the error that would arise from the presence of the parallel resistor, the charging resistor can be made smaller to increase the charging current. This minimizes the effect of the leakage resistance, R_e.

The standard by which the charge time is measured is a fixed clock. This clock is also

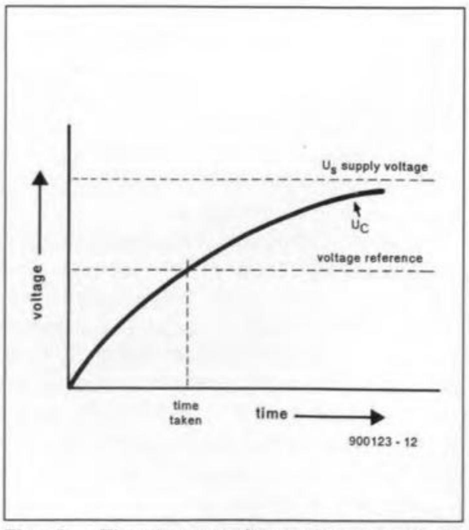

Fig. 2. The charge voltage of a capacitor is essentially a logaritmic (*e*-) curve.

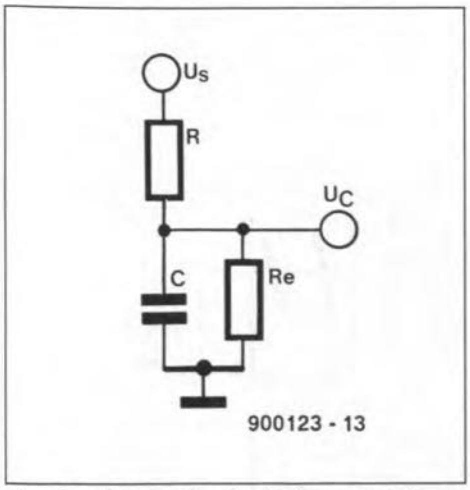

Fig. 3. Accounting for leakage resistance of electrolytic and tantalum capacitors...

divided by 100 to give a second reference as mentioned above. After being selected, one of the reference clocks feeds another two counters. The first one is used along with a D-type bistable, configured to divide by 2, to generate all the timing signals, i.e., to reset the counters and the display, and charge and discharge the capacitor. The second counter feeds the display drivers. The whole operation is shown in the block diagram in Fig. 4.

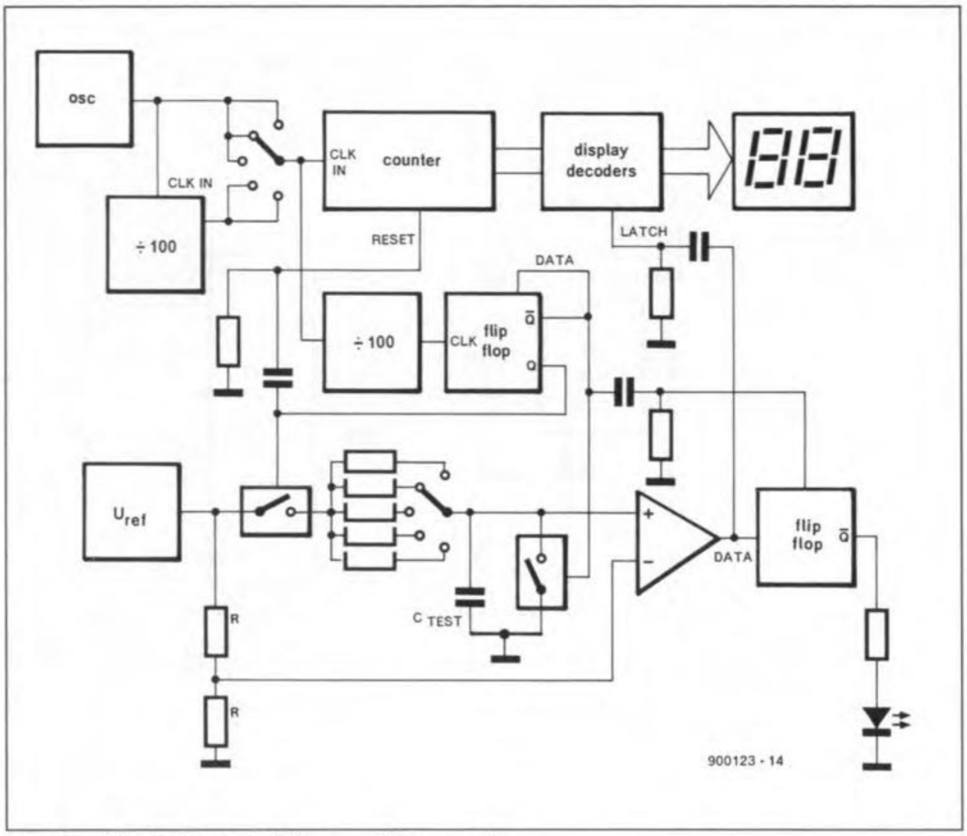

Fig. 4. Block diagram of the capacitance meter.

How it works

The practical circuit of the digital capacitance meter is shown in Fig. 6. A timer Type 555 in astable mode generates the fixed clock, which has a frequency of about 20 kHz. This is also divided by a 4518 dual decade counter, IC2, to give a second clock of 200 Hz. One of these frequencies is selected by S1A, and divided by 100 (IC3) and subsequently by 2 (IC4A). The complementary outputs Q and $\overline{Q}$ are used for all timing operations.

To understand the operation of the circuit, let us assume that it has been running a while, and output O is about to go high for the next 100 clock pulses. On this positive edge, a positive pulse is sent to the display counter, IC7, resetting it to the zero state. The bilateral switch, IC5C, is now closed, charging the test capacitor through the charging resistor selected by S1B. A simple voltage reference for the task has been built around zener diode D1.

If the capacitor has a value within the selected range, it will be charged to half the reference voltage within 100 clock pulses. When it reaches this voltage, the output of comparator IC6 goes high, sending a pulse to the latches of the display drivers. This pulse latches the current value of counter IC7, which now appears on the display.

As we have chosen the value of the charging resistors, the value on the display is also equal to the capacitance. After the 100 clock pulses have elapsed, output Q goes low and $\overline{Q}$ goes high. This opens the charging bilateral switch, IC5C, and closes the discharging one, IC5B. So, for the next 100 clock pulses the capacitor is discharged. A clock timing diagram of the operation is shown in Fig. 5.

Although the capacitor under test will never totally discharge, the amount of charge left in the worst possible case is unlikely to affect the accuracy, as it will be less than 1% of the total, and the system is only accurate to 1 count.

When the discharging cycle is started, the output of the comparator is sampled by bistable IC4B. If the output is low, the capacitor is outside the selected range, and the 'over-range' LED lights. If the comparator output is high, the capacitor is within the selected range, and the LED is turned off.

Both IC8 and IC9 are BCD-to-7 segments decoders, set to drive common-cathode LED displays. Note that capacitors C9 and C10 are essential to prevent the glitches produced by

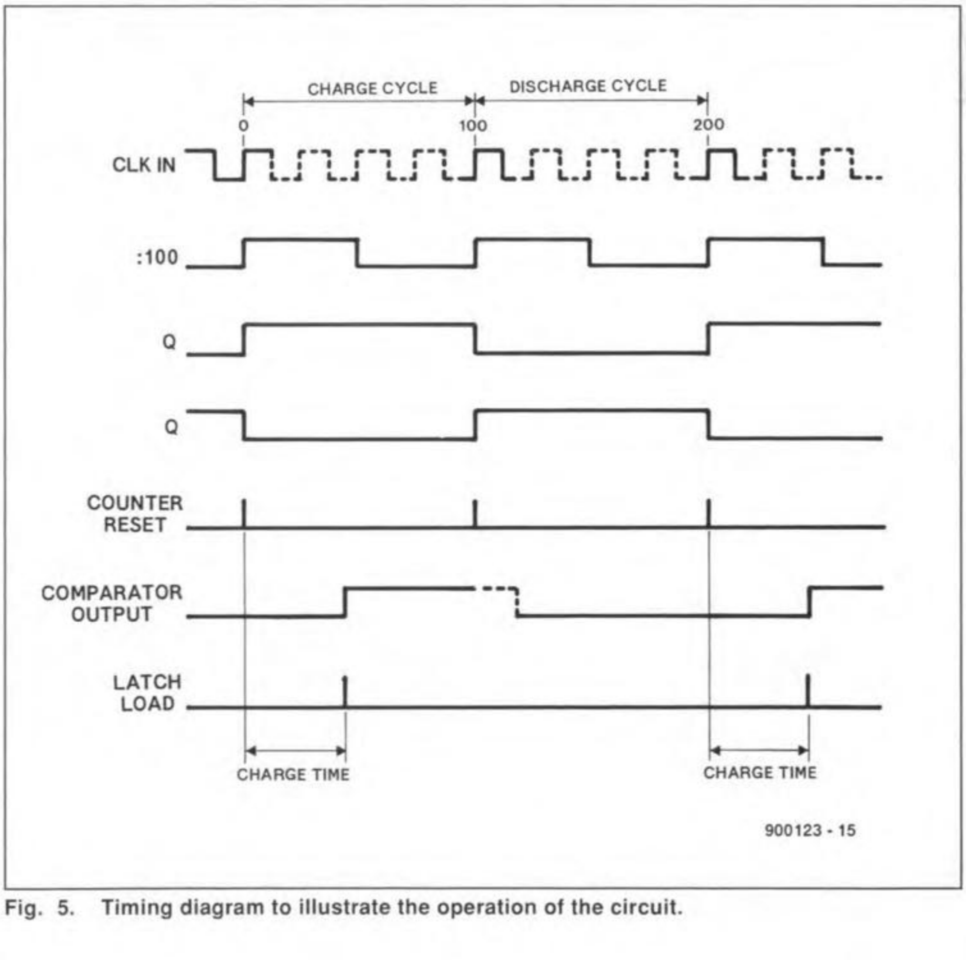

Fig. 5. Timing diagram to illustrate the operation of the circuit.

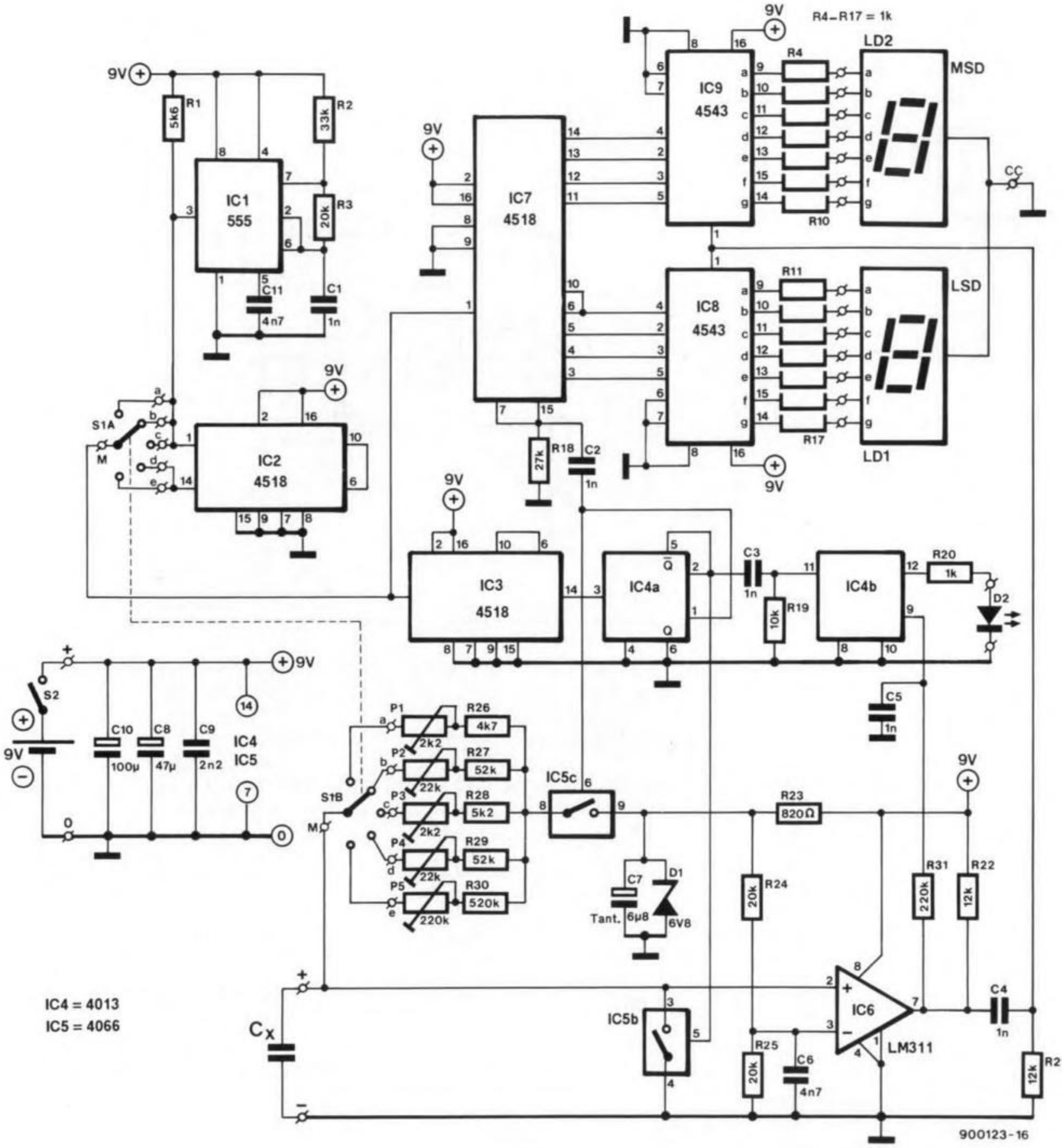

Fig. 6. Circuit diagram of the digital capacitance meter. Although two LED displays are shown, a dual type may also be used.

the digital clocks upsetting the timing of the circuit.

Construction

The author's design for a printed-circuit board is shown in Fig. 7. Firstly, solder the link wires, resistors and the zener diode (remember to get the polarity right). In the prototype, all resistors used were 5% types. Because of the compact nature of this project, use a pencil nose soldering bit and a lot of care (watch out for bridging tracks). Next, fit the capacitors, IC sockets and the presets (vertically mounted types are used here). It is recommended to use polyester capacitors, especially for timing purposes (e.g., C1) as these are stable. The presets are a tight fit and the solder pads are small, so that their legs may need a little filing to fit the holes. Next comes the 2-pole rotary range selecting switch, which is fitted on the front panel of the enclosure. Ribbon cable is suggested to connect the display to the main board. In the prototype, a small off-cut of veroboard was used to mount the display, and a small non-reflective bezel to improve the readability. The display can be almost any dual common-cathode LED type. Four bolts are used to hold the board in place, and a clip or a piece of two-sided adhesive tape to stop the battery from rattling around in the case. Two 4-mm sockets, one red (for +) and one black (for 0 volts), are fitted on the cover plate to connect the unknown capacitor.

Note that if IC sockets are used, C2 and C3 become tight fits, so use disc ceramic types here.

Testing

The completed printed-circuit board may be tested after it has been connected to the battery and the external controls. To test the instrument, a voltmeter is required and, if you

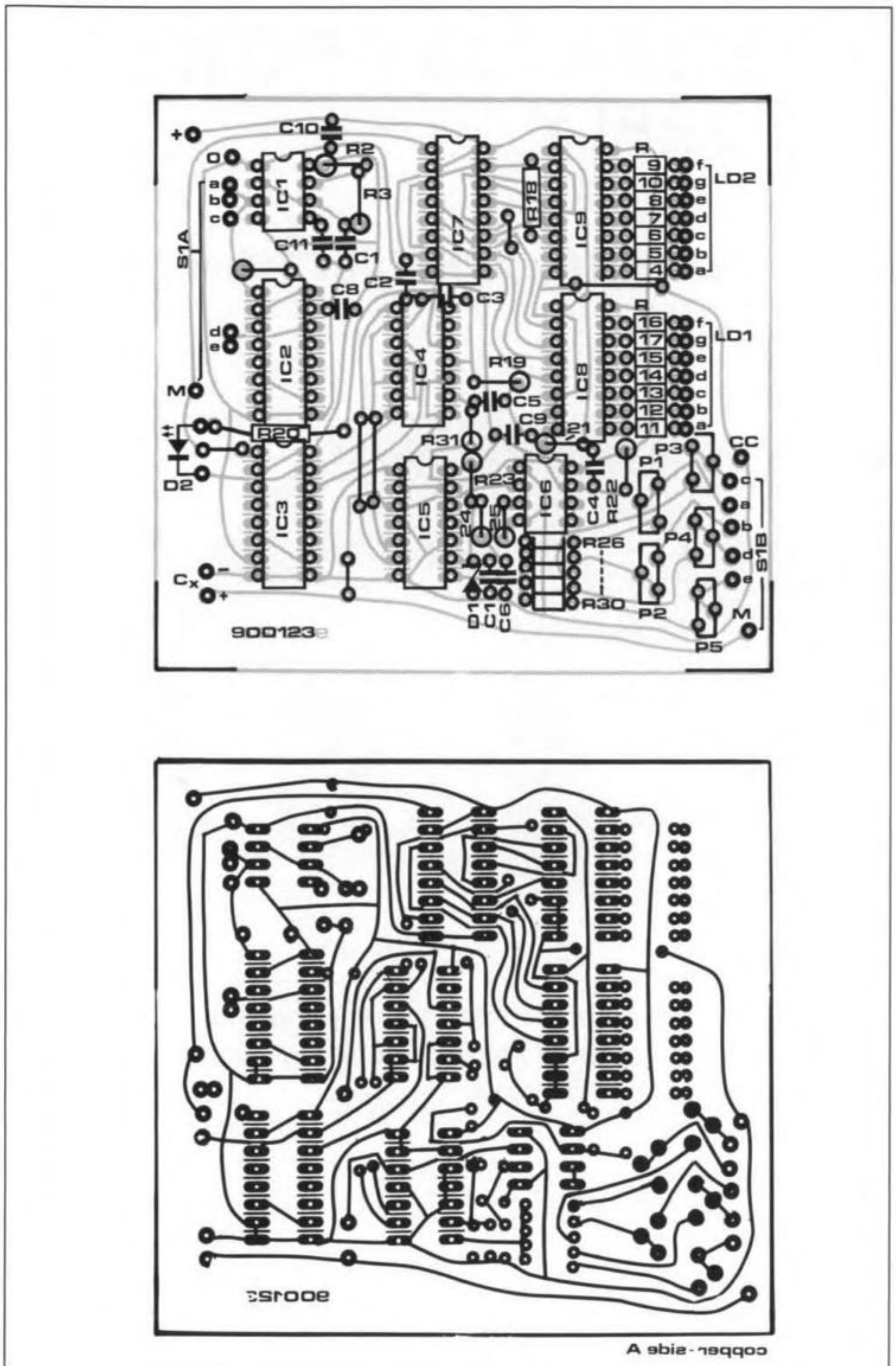

Fig. 7. Author's design of a printed-circuit board for the capacitance meter.

COMPONENTS LIST

Resistors:

1	5kΩ6	R1
1	33kΩ	R2
3	20kΩ	R3;R24;R25
14	1kΩ	R4 – R17
1	27kΩ	R18
1	10kΩ	R19
1	1kΩ	R20
2	12kΩ	R21;R22
1	820Ω	R23
1	4kΩ7	R26
1	52kΩ	R27
1	7kΩ5	R28
1	82kΩ	R29
1	820kΩ	R30
1	220kΩ	R31
2	2kΩ2 preset V	P1;P3
2	22kΩ preset V	P2;P4
1	220kΩ preset V	P5

Capacitors:

5	1nF	C1 – C5
2	4nF7	C6;C11
1	6µF8 tantalum	C7
1	47µF	C8
1	2nF2	C9
1	100µF	C10

Semiconductors:

1	NE555	IC1
3	4518	IC2;IC3;IC7
1	4013	IC4
1	4066	IC5
1	LM311	IC6
2	4543	IC8;IC9
1	6V8 0.4W zener diode	D1
1	LED 5-mm dia.	D2
1	dual CC LED display	LD1;LD2

Miscellaneous:

1	2-pole 5-way rotary switch	S1
1	miniature on/off switch	S2
1	PP3 battery connector	

have one, an oscilloscope.

First, check that pin 3 of IC1 is supplying a 20-kHz signal. This check is best made with an oscilloscope, although it is possible, if you have bat-like hearing, to try use a pair of headphones and a series resistor. Also check pin 14 of IC2, which should supply a 200-Hz signal.

Set the range switch to the highest range (100 µF), when pin 14 on IC3 should be toggling at about 2 Hz. Finally, check pins 1 and 2 of IC4, which should be toggling at 1 Hz, out of phase with each other.

To check the charging and discharging mechanism you need a voltmeter. Check that there is a stable 6.8 V across the zener diode. Connect a 68-µF capacitor to the unit. The voltage across it should rise and fall regularly. Similarly, the output of the comparator, pin 7 of IC6, should also be pulsing regularly. If the capacitor is changed by one whose value falls outside the range, the comparator's output should remain low, and the LED turn on.

Setting up

This requires a bit of common sense as each range needs calibration separately. Needless to say that access to a set of reference capacitors or another capacitance meter would make life easy.

For the low ranges, setting up is fairly easy as 1% and 2.5% polystyrene capacitors are widely available. Note that the tolerance of your reference capacitor determines the overall accuracy of the final setting. A good choice is 6.8 nF (1% or 5%) for the first range.

Connect the capacitor and adjust P1 until the display reads the expected value, in this case '68'. If you have a few different capacitors lying around, use an average to adjust the preset. Follow the same procedure for the other ranges, so for the second range try a 68 nF capacitor, and a 680 nF one for the third range.

The top two ranges are a little difficult to calibrate as the type of reference capacitor is practically limited to an electrolytic or a tantalum one. Unfortunately, both these types have a tolerance of typically 20%. Here, it is best to use a mix of available capacitors and average out the readings to get a consensus. Obviously, all polarized capacitors must be connected the right way around. ■

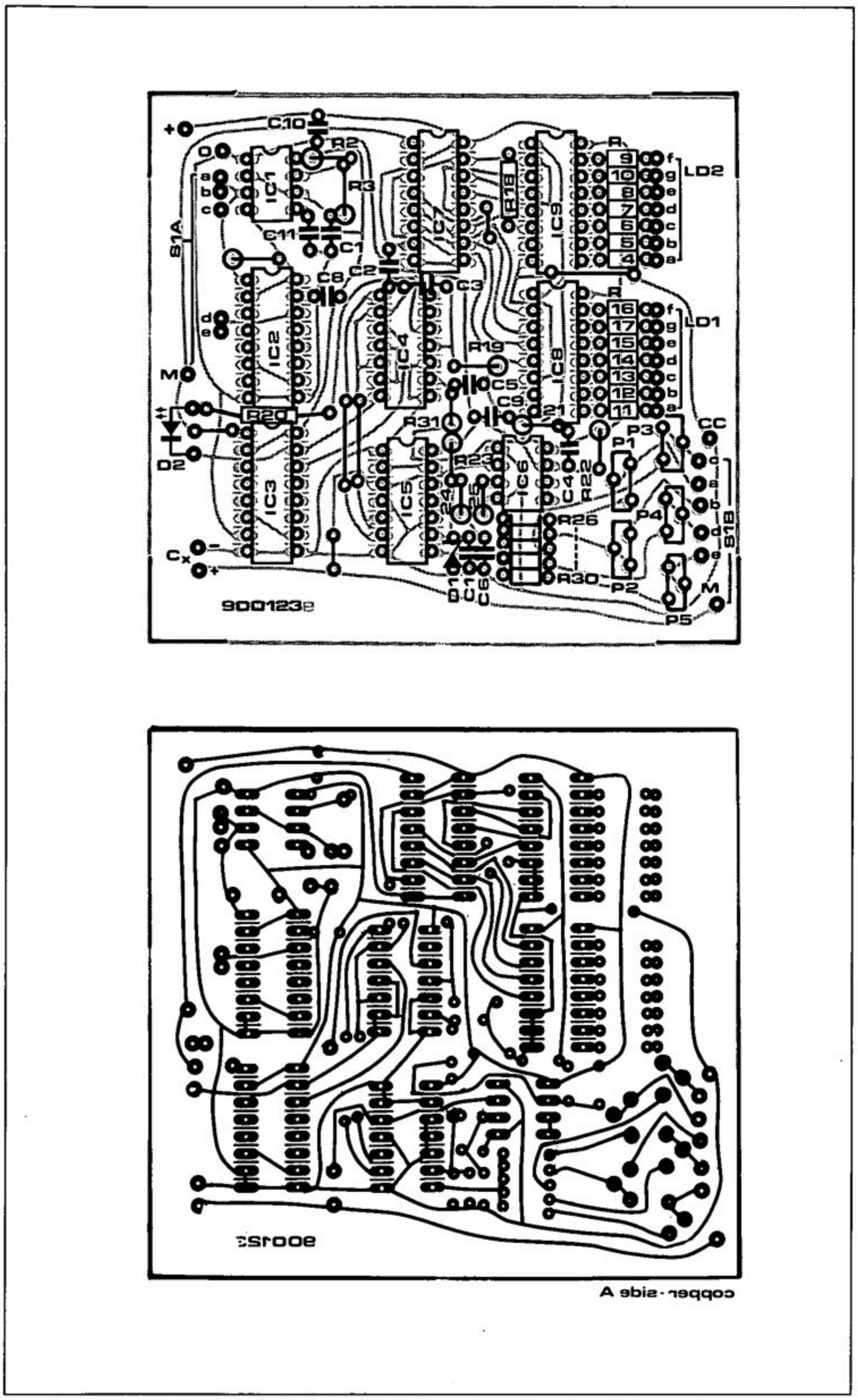

Fig. 7. Author's design of a printed-circuit board for the capacitance meter.

COMPONENTS LIST

Resistors:		
1	5kΩ6	R1
1	33kΩ	R2
3	20kΩ	R3;R24;R25
14	1kΩ	R4 – R17
1	27kΩ	R18
1	10kΩ	R19
1	1kΩ	R20
2	12kΩ	R21;R22
1	820Ω	R23
1	4kΩ7	R26
1	52kΩ	R27
1	7kΩ5	R28
1	82kΩ	R29
1	820kΩ	R30
1	220kΩ	R31
2	2kΩ2 preset V	P1;P3
2	22kΩ preset V	P2;P4
1	220kΩ preset V	P5
Capacitors:		
5	1nF	C1 – C5
2	4nF7	C6;C11
1	6μF8 tantalum	C7
1	47μF	C8
1	2nF2	C9
1	100μF	C10
Semiconductors:		
1	NE555	IC1
3	4518	IC2;IC3;IC7
1	4013	IC4
1	4066	IC5
1	LM311	IC6
2	4543	IC8;IC9
1	6V8 0.4W zener diode	D1
1	LED 5-mm dia.	D2
1	dual CC LED display	LD1;LD2
Miscellaneous:		
1	2-pole 5-way rotary switch	S1
1	miniature on/off switch	S2
1	PP3 battery connector	

have one, an oscilloscope.

First, check that pin 3 of IC1 is supplying a 20-kHz signal. This check is best made with an oscilloscope, although it is possible, if you have bat-like hearing, to try use a pair of headphones and a series resistor. Also check pin 14 of IC2, which should supply a 200-Hz signal.

Set the range switch to the highest range (100 μF), when pin 14 on IC3 should be toggling at about 2 Hz. Finally, check pins 1 and 2 of IC4, which should be toggling at 1 Hz, out of phase with each other.

To check the charging and discharging mechanism you need a voltmeter. Check that there is a stable 6.8 V across the zener diode. Connect a 68-μF capacitor to the unit. The voltage across it should rise and fall regularly. Similarly, the output of the comparator, pin 7 of IC6, should also be pulsing regularly. If the capacitor is changed by one whose value falls outside the range, the comparator's output should remain low, and the LED turn on.

Setting up

This requires a bit of common sense as each range needs calibration separately. Needless to say that access to a set of reference capacitors or another capacitance meter would make life easy.

For the low ranges, setting up is fairly easy as 1% and 2.5% polystyrene capacitors are widely available. Note that the tolerance of your reference capacitor determines the overall accuracy of the final setting. A good choice is 6.8 nF (1% or 5%) for the first range.

Connect the capacitor and adjust P1 until the display reads the expected value, in this case '68'. If you have a few different capacitors lying around, use an average to adjust the preset. Follow the same procedure for the other ranges, so for the second range try a 68 nF capacitor, and a 680 nF one for the third range.

The top two ranges are a little difficult to calibrate as the type of reference capacitor is practically limited to an electrolytic or a tantalum one. Unfortunately, both these types have a tolerance of typically 20%. Here, it is best to use a mix of available capacitors and average out the readings to get a consensus. Obviously, all polarized capacitors must be connected the right way around. ■

100082-II

400-WATT LABORATORY POWER SUPPLY

PART 2: MODES OF OPERATION, CONSTRUCTION AND SETTING UP

Before dealing with the construction of the PSU, this second and final instalment discusses the operation of the four modes in which the instrument can be used.

G. Boddington

THE complete 400-watt power supply as shown in the photograph consists of two identical circuits, which are built on separate printed-circuit boards. Each printed-circuit board holds four pin headers for the interconnection of the circuits and their connections to the read-outs and controls on the front panel. Each PSU has two indication instruments, one for the voltage (connected to pin 6 of K5) and one for the current (connected to pin 3 of K5). The voltage read-out, M1, is connected in parallel with the output terminals, and the current read-out, M2, in parallel with shunt resistor R18.

Header K4 connects the circuit to the two potentiometers for the voltage and current settings, and to the two LEDs that indicate the onset of the limiting circuits.

Modes of operation

As shown in the 'Main Specifications' box in last month's instalment, the power supply is capable of four modes of operation. Each of these is briefly discussed here.

Mode: Single

This mode is the simplest of the four. It requires only one printed-circuit board. Connector K3 need not be fitted, while K2 is wired with three fixed connections: 13-14, 15-16 and 17-18.

Mode: Independent

This mode allows the two PSUs to be used and set independently, without any electrical interconnection (except, of course, the one at the mains socket). Note that although the two circuits are linked via the flatcable between K2 and K3, the connections are broken by switch S2. Each PSU circuit is capable of supplying 0 – 40 V at 0 – 5 A.

Mode: Parallel

This mode is selected by setting the mode switch to 'independent', and connecting the output terminals as shown in Fig. 9. The two high-power diodes prevent the supply with the higher output voltage pumping current into the other. To enable the PSU to deliver its maximum output current of 10 A, the out-

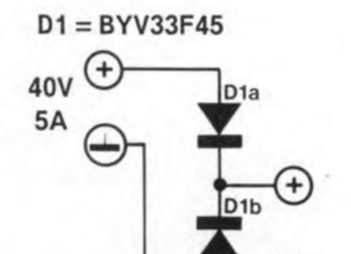

Fig. 9. In parallel mode, two diodes are used to couple the supplies. This arrangement prevents a short-circuit as a result of possible potential differences between the positive output terminals.

put voltages of the two supply circuits should be set to match as closely as possible. As shown in Fig. 9, the Type BYV33F45 from Philips Components contains two high-current Schottky diodes whose cathodes are joined and brought out to a common terminal. This component is supplied in a SOT-186 package. Where the BYV33F45 is difficult to obtain, other high-current rectifier diodes may be used, provided they are rated at a forward current of 5 A and a reverse voltage of 45 V or greater. Another important characteristic is the forward voltage drop of the diodes: evidently, this should be a small as possible since it is not compensated by the supply circuit.

Limiting circuit		LED			
Master	Slave	Master		Slave	
		U	I	U	I
Current	—	0	1	1	0
Voltage	—	1	0	1	0
—	Current	0	0	1	1

Table 1. Overview of LED indications to signal overload conditions in the two supplies.

Mode: Tracking

In this mode, one supply circuit functions as the *Master*, and the other the as the *Slave*. The diagrams in Fig. 7 (see part 1) and Fig. 10 show the interconnections made via headers K2-K3 and the mode switch, S2. On the Master PCB, only K2 is used, on the Slave PCB, only K3. The four switch contacts are set to the 'tracking' mode. The positive terminal of the Slave is internally connected to the negative terminal of the Master. The voltage at the positive terminal of the Master is fed to the Slave via R10-R11. Switch contact S2b establishes a common reference potential, so that the positive terminal of the Master and the negative terminal of the Slave are at an equal voltage with respect to the common terminal. Only the signs of the two voltages are different. This mode allows the instrument to be set up as a symmetrical supply (±0 to ±40 V), or one capable of supplying 0 to 80 V. The maximum output current is 5 A in both cases. It should be noted that the internal connection via the flatcable is not suitable for currents exceeding 100 mA or so. For higher currents, an external link must be made on the output terminals. This link can take the form of a small piece of copper or aluminium, cut to size to fit over the terminals.

The voltage limiting circuit of the Slave works conventionally on the series transistors. The current limiting circuit, however, is coupled to the Master. The connection is made via an optocoupler, IC6, to ensure electrical isolation between the supply circuits of the two opamps. When the current limiting circuit is actuated, the output voltage of the Master drops. Consequently, the output voltage of the Slave drops also. Table 1 shows which LEDs light to indicate the various overload conditions.

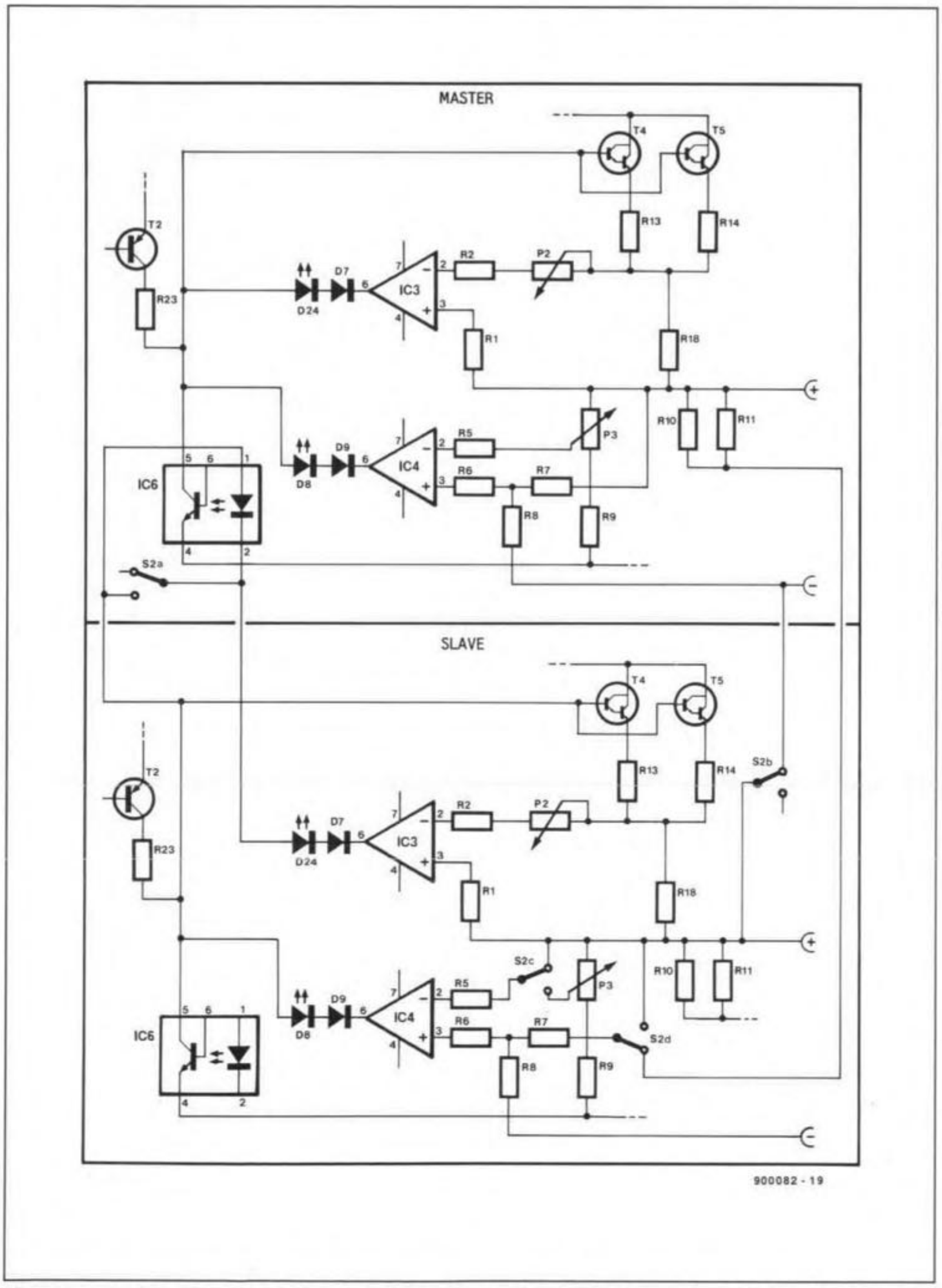

Fig. 10. In tracking mode, the output voltage of the Slave supply is determined by the Master supply.

Construction

Although the printed-circuit board for a single supply is fairly large (see Fig. 11), the construction should not present undue problems. The power resistors must be fitted at a small distance, say, 10 mm, above the board. Fit triac Tri1 with a suitably sized heatsink. Since the triac and a number of other components in the transformer preregulation circuit are at mains potential, great care must be taken to ensure the necessary insulation. **Never** bolt the triac to the bottom panel of the case, not even when using an insulating washers and a nylon screw. Whatever heat-sink you use, make sure it can not touch the screw or the nut fitted in the corner to secure the PCB.

The opamps and the optocouplers may be soldered direct to the board. Where the suppressor choke, L1, is difficult to obtain, it may be replaced by a home-made one. Simply wind about 40 turns of enamelled copper wire on a 25-mm o.d. ferrite ring core. Apply some two-component glue or epoxy resin to secure the inductor to the PCB.

On completion of the supply boards, run a thorough check on your soldering work. Check that all the polarized components (these include the box headers!) are fitted the right way around. Next, fit the boards, the buffer capacitors, the bridge rectifiers and the mains transformers on the bottom plate of

COMPONENTS LIST

ATTENTION: two required of each part listed.

Resistors:

4	10kΩ	R1,R2,R5,R6
1	22kΩ	R3
2	4kΩ7	R4,R33
3	2kΩ2	R7,R12,R23
1	8kΩ2	R8
1	470Ω	R9
2	12kΩ	R10,R11
3	0Ω22 5W	R13,R14,R18
1	220Ω	R15
1	330kΩ	R16
2	100kΩ	R17,R20
2	1kΩ	R19,R32
1	220kΩ	R21
1	1kΩ8	R22
1	2kΩ2 1W	R24
1	680Ω	R25
1	47kΩ	R26
2	47kΩ 1W	R27,R28
1	10kΩ 10W	R29
1	150kΩ	R30
1	27kΩ	R31
1	220Ω 1W	R34
1	1MΩ preset H	P1
2	2kΩ2 linear potentiometer	P2,P3a
1	220Ω linear potentiometer	P3b
1	500Ω preset H	P4
1	5kΩ preset H	P5

Capacitors:

1	100nF 100V	C1
1	100nF 400V	C2
8	47nF	C7–C10,C15–C18
2	1000μF 40V	C11,C12
2	10μF 40V	C13,C14
2	1nF 63V	C19,C21
1	330pF	C20
1	100pF	C22
1	2μF2 63V	C23
1	100nF	C24
1	470μF 63V	C25
1	10,000μF 63 V	C26

Semiconductors:

4	33V 1W zener diode	D1–D4
1	15V 0.4W zener diode	D6
2	1N4148	D7,D9
2	red LED (5mm)	D8,D24
10	1N4001	D10,D11, D16–D23
4	1N4004	D12–D15
1	ER900	Di1
1	100V 25 A bridge rectifier (Motorola BYW61)	B1
2	BC547B	T1,T3
1	BC557B	T2
2	BDV65B	T4,T5
1	TIC263D	Tri1
1	TIC206D-P	Tri2
1	7812	IC1
1	7912	IC2
2	LM741	IC3,IC4
1	CNY17-2	IC5
1	TIL111	IC6

Miscellaneous:

1	choke 100μH 6 A (SFT1250)	L1

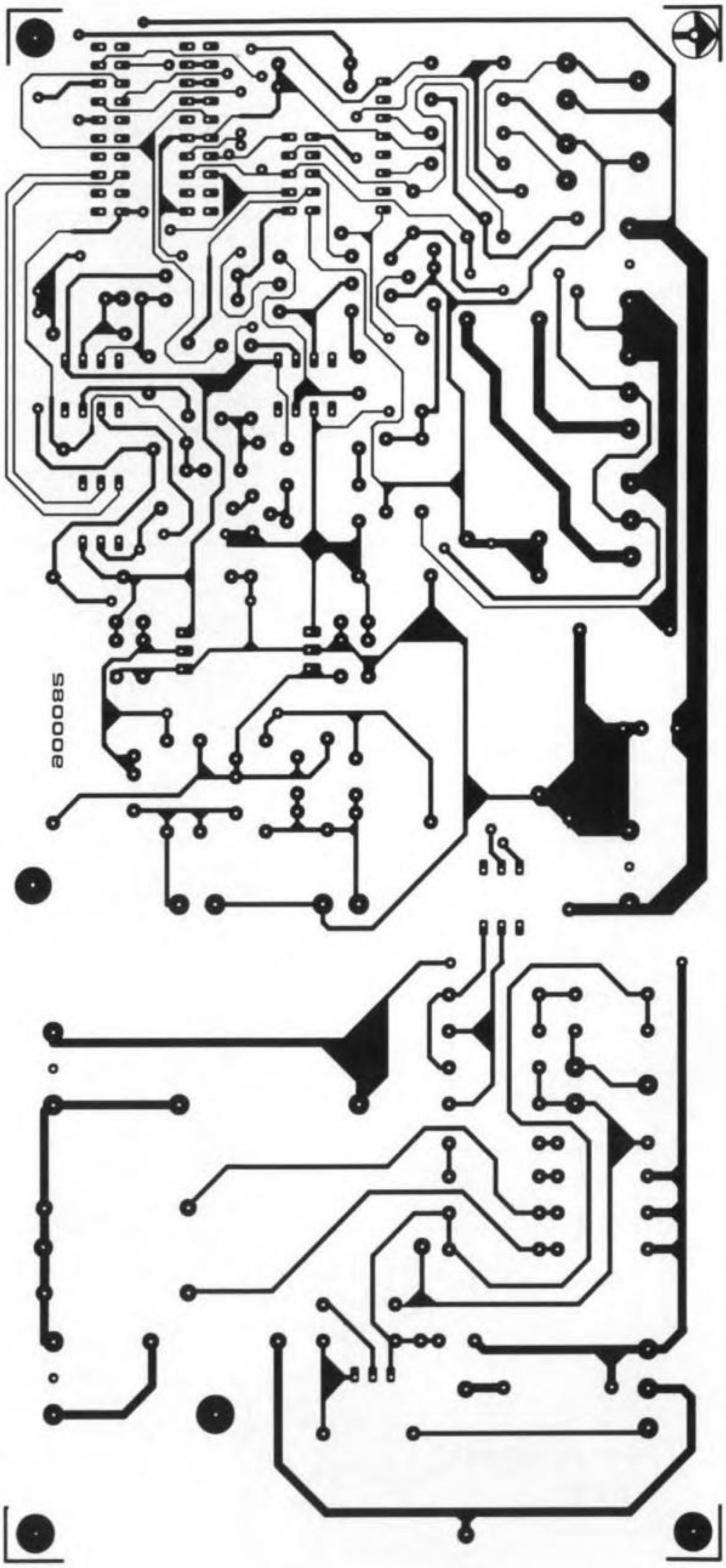

Fig 11a. Track lay-out (mirror image) of the printed-circuit board for the PSU.

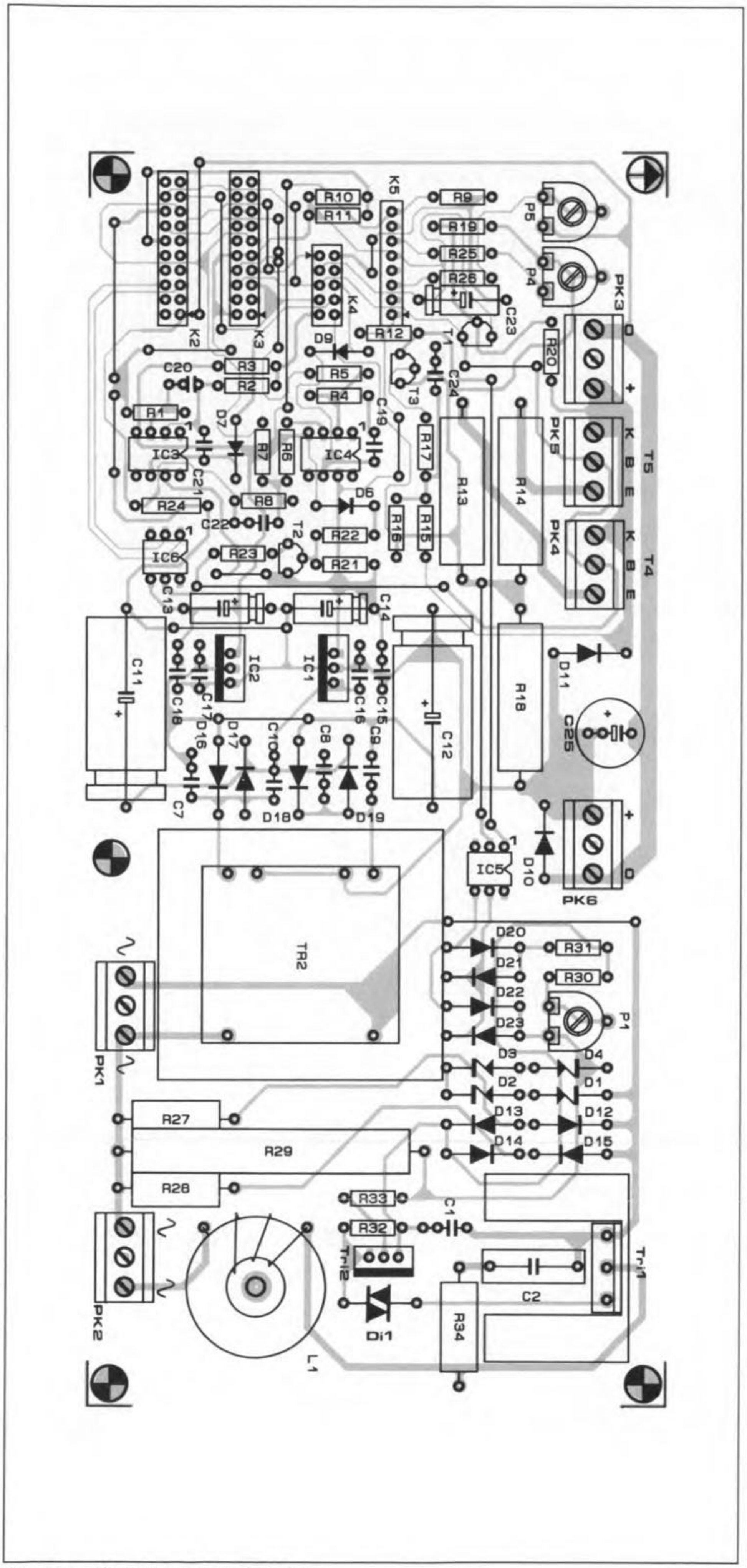

Fig. 11b. Component mounting plan.

1	toroid transformer 2×22V @5.11 A (ILP 61015 for 220V mains, or ILP 63015 for 240V mains)	Tr1
1	PCB-mount transformer 2×12V @10VA	Tr2
2	3½-digit digital voltmeter (Elektor 890117)	
2	20-way PCB mount box header	K2;K3
1	10-way PCB mount box header	K4
1	8-way SIL pin header	K5
6	3-way PCB terminal block	PK1–PK6
2	thermal insulation set for BDV65B	
1	thermal insulation set for TIC263D.	
1	heat-sink 1.1 K/W for T4/T5 (Fischer SK120)	
1	heat-sink 13 K/W for Tri1 (Fischer FK225)	
2	8-way DIL IC sockets	
1	heavy-duty wander socket (red)	
1	heavy-duty wander socket (black)	
1	printed-circuit board	900082

One required of the following parts:

1	6-pole toggle push-button	S1
1	self-adhesive front panel foil	900082-F
4	20-way IDC socket	
2	10-way IDC socket	
1	mains appliance socket with built-in fuseholder	
1	3.15A slow fuse (single supply)	
1	6.3A slow fuse (double supply)	
1	enclosure ESM ER48/13 (250-mm deep) or ET38/13 (250 or 350 mm deep).	

the enclosure. The general lay-out of the bottom plate is shown in the wiring diagram in Fig. 12 and the photograph in Fig. 14.

Cut clearances in the rear panel to enable the power transistors to be fitted to the heat-sinks. If possible use heavy-duty ceramic insulating washers and check that each transistor is electrically insulated from the heat-sink. Failing ceramic insulators, the more usual (and less expensive) combination of mica washers and a generous amount of heat-sink compound may be used. The clearance for the mains socket is located between the heat-sinks as shown in Fig. 13.

Use 1.5 mm^2 cross-sectional area (c.s.a.) wire for the mains connections, and 2.5 mm^2 c.s.a. wire for the high-current connections. To give the PSU a professional internal look, it is recommended to use solid wires of different colours because these are easily traced and bent to form rigid cable paths where necessary. Note that two wires between the three-way PCB terminals and the power transistors are crossed.

The 20-way flatcable between the Master (K2) and Slave (K3) supply is 'tapped' with an IDC connector and discrete wires that take the relevant connections to the mode switch (S2).

The PSU is housed in a 3-HU (height-units) 19-inch enclosure with a mesh cover plate. The photographs in Figs. 13 and 14 show the arrangement of the PCBs, the trans-

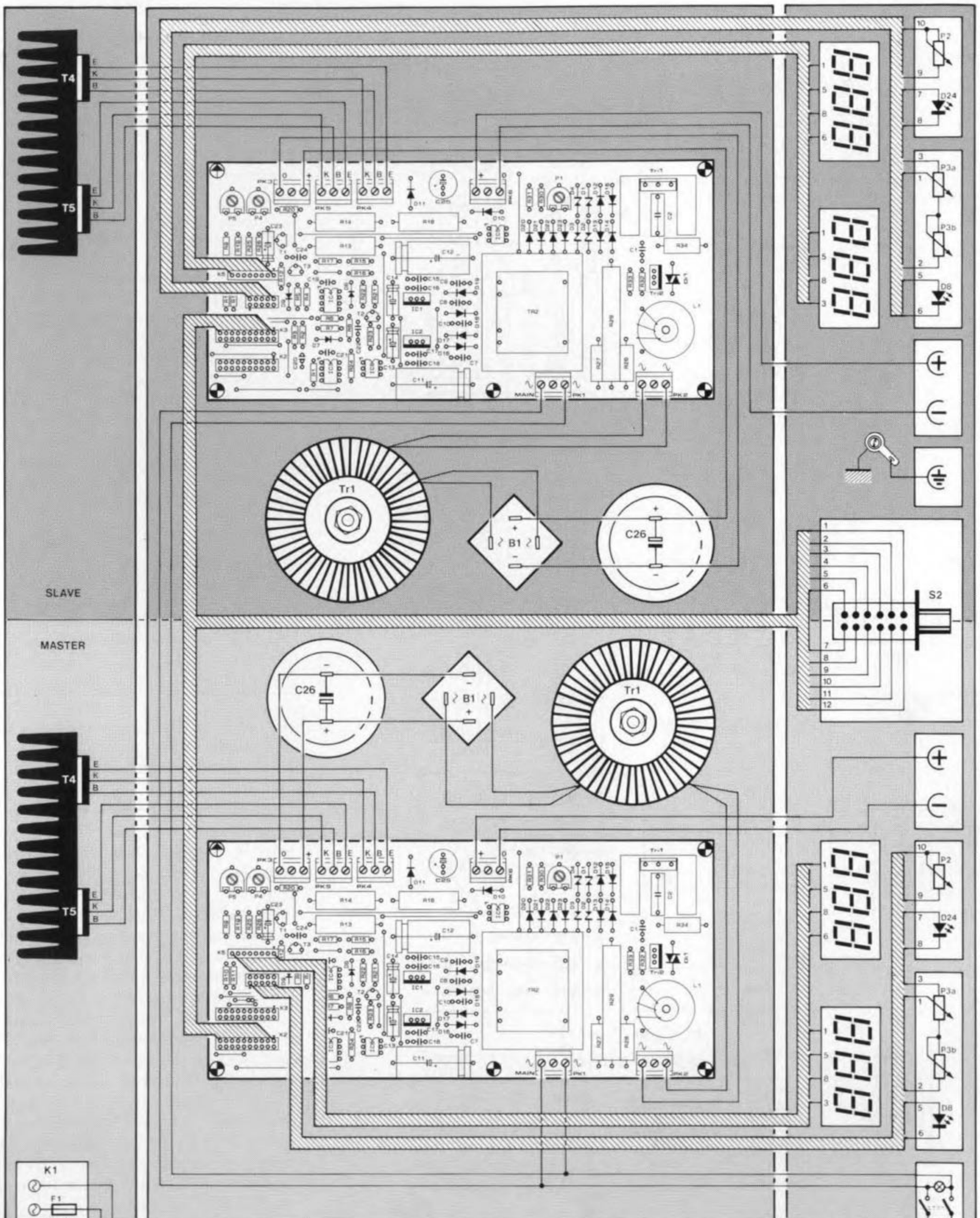

Fig. 12. Wiring diagram for the double version of the power supply. The drawing also indicates the arrangement of the various components on the bottom plate of the 19-inch enclosure.

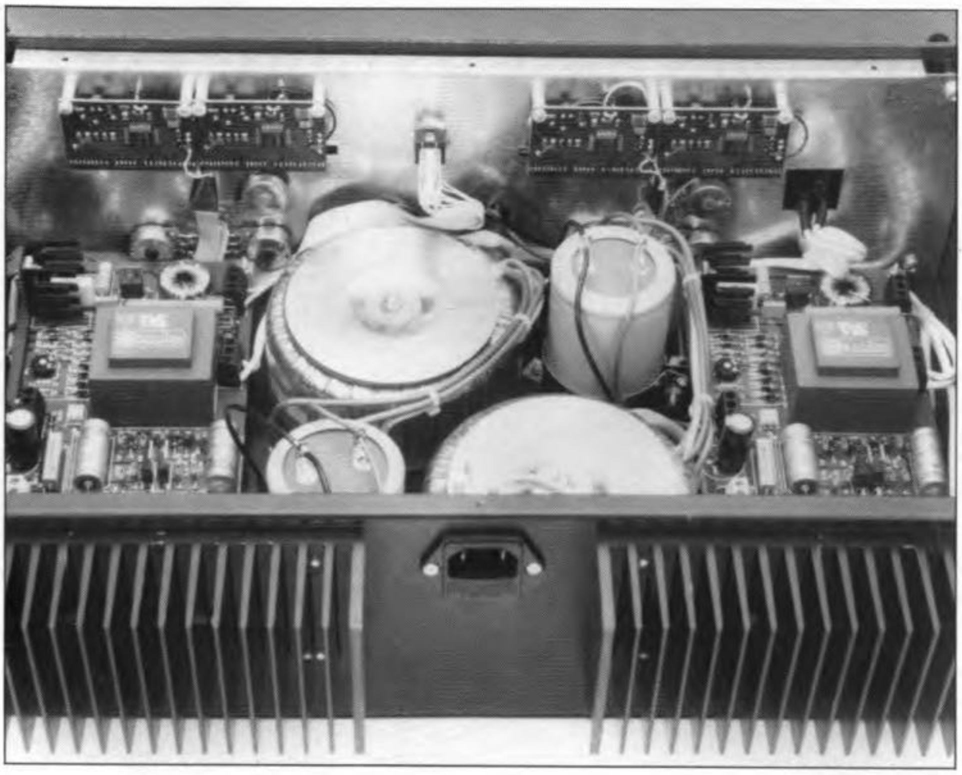

Fig. 13. Top view of the completed power supply with the cover plate removed. Note the four read-out modules mounted at the inside of the front panel.

formers, the buffer capacitors, the front-panel controls and read-outs, and the heatsinks on the rear panel.

Voltage and current read-outs

The four read-outs can be either moving-coil meters (1 mA full-scale deflection instruments) or 3½-digit digital voltmeter modules. The modules used in the prototype are of the type described in Ref. 1. These circuits are fitted with fixed voltage regulators, which are powered by the supply (i.e., the Master or the Slave) they belong with. This supply configuration is shown in Fig. 6a in Ref. 1. The half-digit is not used here. The meter modules are connected as shown in the circuit diagram of the power supply. Note, however, that each of the current meters, M_2, must be shunted by an additional 47-Ω resistor, R_s, so that network R_s-R_{25}-P_4 passes a current between 0.9 mA and 1.5 mA, which produces a drop of 35 mV to 65 mV on R_s. The preset, P_4, is adjusted for a drop of 50 mV across R_s at an output current of 5 A. The read-out should then indicate 5.00. Both voltage read-outs in the PSU are also fitted with a 47-Ω shunt resistor.

The voltage and current indication modules are fitted on to the front panel of the 19-inch enclosure, together with their input voltage regulators and decoupling capacitors. When the read-outs are connected to the supply circuits via flatcables, each of their ground terminals must be connected to the supply ground via a separate, relatively thick, wire. This wire, which serves to prevent noise, is best fitted between the display board and the negative terminal of electrolytic capacitor C_{12}.

Alignment

Start by setting all potentiometers and presets to the centre of their travel. Connect a load to the output. The electronic load described in Ref. 2 is just the thing for this purpose. Set the current and voltage controls to nought, and null the read-outs. Next, hook up a DMM, set the output voltage to 40 V and adjust P_5 for a corresponding indication. Reduce the output voltage to 1 V, and load the supply with a 0.18-Ω/5 W resistor, connected via the DMM set to current measurement. Carefully adjust the voltage until the DMM reads 5 A. Next, adjust P_4 for a corresponding reading on the current display.

Finally, measure the voltage drop across the series transistors: this should be about 10 V. Set an output voltage of 3 V, and set the output current to maximum (P_2). Short-circuit the output terminals, and check the current. If this is about 5 A, the PSU is fully functional and ready to be taken into use. ■

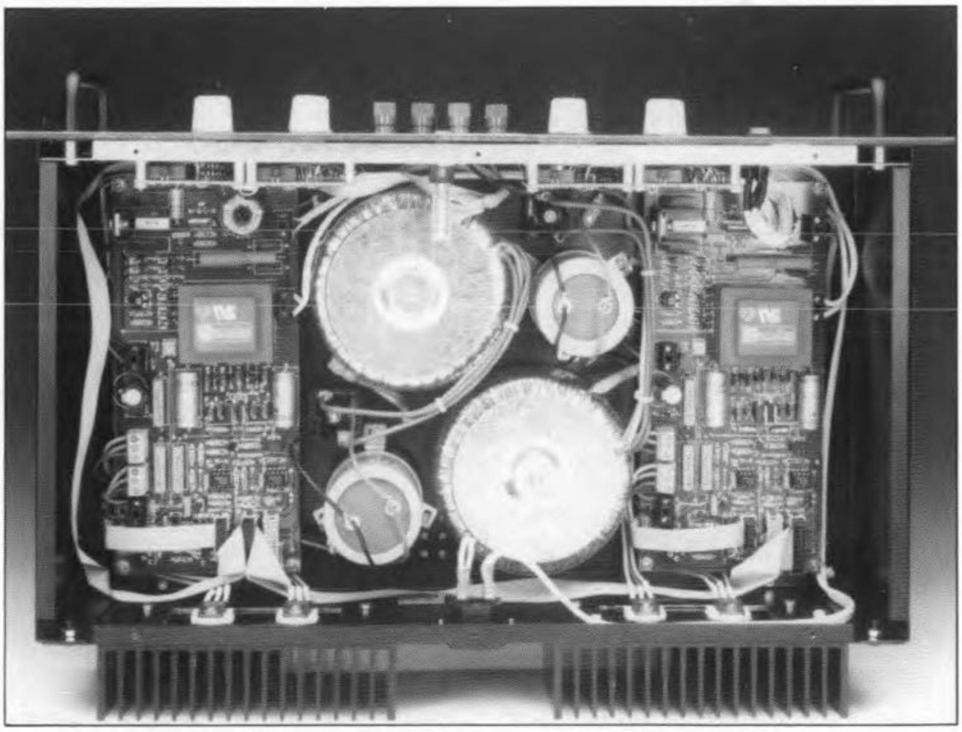

Fig. 14. Inside view of the PSU showing the wiring and the component arrangement on the bottom plate of the 19-inch enclosure.

References:

1. "3½-digit SMD voltmeter". *Elektor Electronics* November 1989.
2. "Electronic load". *Elektor Electronics* June 1990.

COMPONENTS LIST

ATTENTION: two required of each part listed.

Resistors:

4	10kΩ	R1,R2,R5,R6
1	22kΩ	R3
2	4kΩ7	R4,R33
3	2kΩ2	R7,R12,R23
1	8kΩ2	R8
1	470Ω	R9
2	12kΩ	R10,R11
3	0Ω22 5W	R13,R14,R18
1	220Ω	R15
1	330kΩ	R16
2	100kΩ	R17,R20
2	1kΩ	R19,R32
1	220kΩ	R21
1	1kΩ8	R22
1	2kΩ2 1W	R24
1	680Ω	R25
1	47kΩ	R26
2	47kΩ 1W	R27,R28
1	10kΩ 10W	R29
1	150kΩ	R30
1	27kΩ	R31
1	220Ω 1W	R34
1	1MΩ preset H	P1
2	2kΩ2 linear potentiometer	P2,P3a
1	220Ω linear potentiometer	P3b
1	500Ω preset H	P4
1	5kΩ preset H	P5

Capacitors:

1	100nF 100V	C1
1	100nF 400V	C2
8	47nF	C7–C10,C15–C18
2	1000µF 40V	C11,C12
2	10µF 40V	C13,C14
2	1nF 63V	C19,C21
1	330pF	C20
1	100pF	C22
1	2µF2 63V	C23
1	100nF	C24
1	470µF 63V	C25
1	10,000µF 63 V	C26

Semiconductors:

4	33V 1W zener diode	D1–D4
1	15V 0.4W zener diode	D6
2	1N4148	D7,D9
2	red LED (5mm)	D8,D24
10	1N4001	D10,D11, D16–D23
4	1N4004	D12–D15
1	ER900	Di1
1	100V 25 A bridge rectifier (Motorola BYW61)	B1
2	BC547B	T1,T3
1	BC557B	T2
2	BDV65B	T4,T5
1	TIC263D	Tri1
1	TIC206D-P	Tri2
1	7812	IC1
1	7912	IC2
2	LM741	IC3,IC4
1	CNY17-2	IC5
1	TIL111	IC6

Miscellaneous:

1	choke 100µH 6 A (SFT1250)	L1

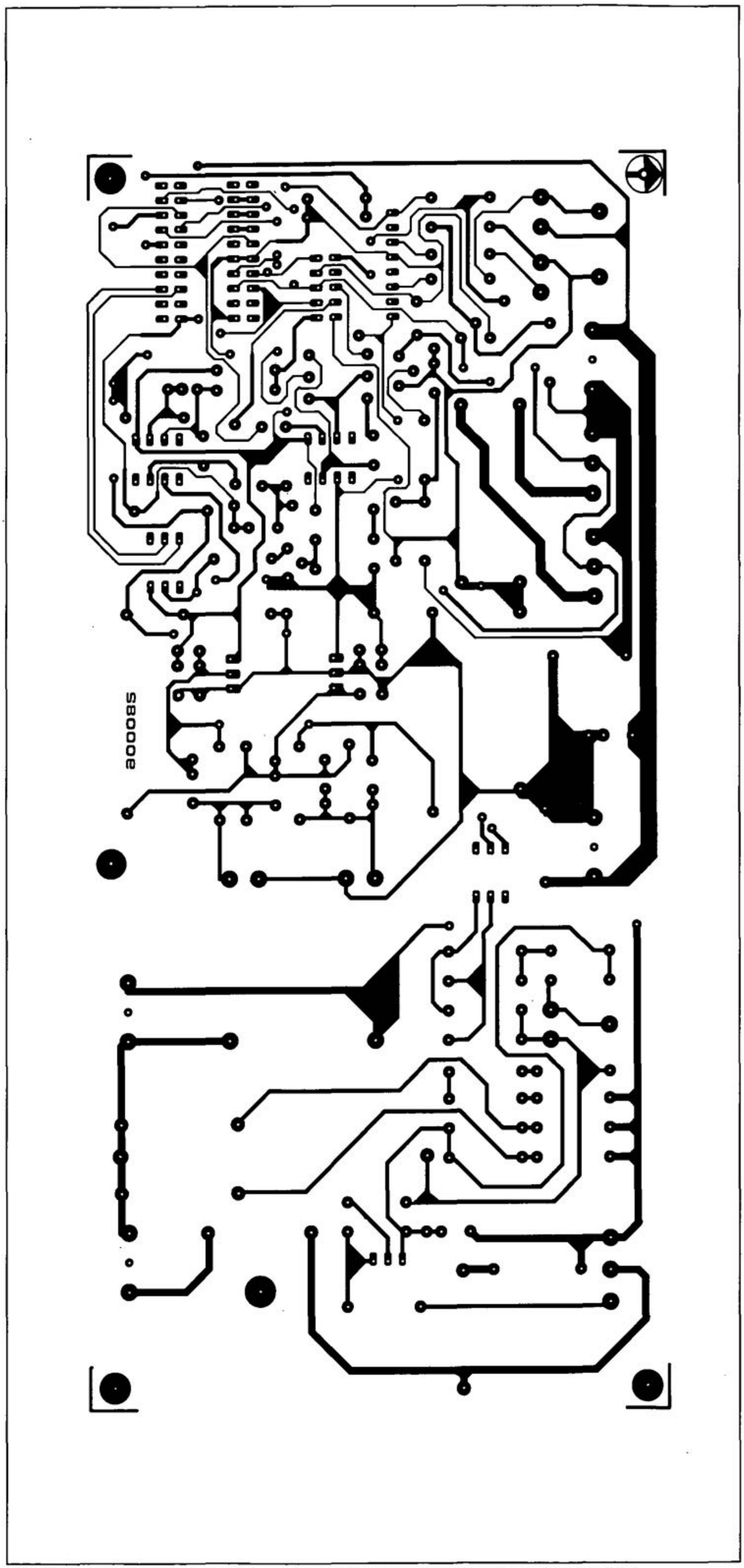

Fig 11a. Track lay-out (mirror image) of the printed-circuit board for the PSU.

400-watt laboratory power supply

October 1989 and November 1990

A number of constructors of this popular project have brought the following problems to our attention.

1. The onset point of the current limit circuit lies at about 3 A, which is too low. Solve this problem by replacing T1 with a Type BC517 darlington transistor, and R20 with a 82kΩ resistor.

2. Depending on the current transfer ratio of the optocoupler used, the transformer produces ticking noises. This effect, which is caused by overshoot in the pre-regulation circuit, may be traced with the aid of an oscilloscope monitoring the voltage across C26 at a moderate load current. The capacitor must be charged at each cycle of the mains frequency, and not once every five cycles. The problem is best solved by reducing the amplification of the regulation circuit. Replace R17 with a 39 kΩ resistor, and create feedback by fitting it between the base and the collector of T3. Also add a resistor in series with the optocoupler. These two changes are illustrated in Figs. 1 and 2. Lower R16 to 10 kΩ, increase C24 to 10 µF, and increase R15 to 270 kΩ.

3. Excessive heating of the transformer is caused by a d.c. component in the primary winding. This is simple to remedy by fitting a capacitor of any value between 47 nF and 470 nF, and a voltage rating of 630 V, across the primary connections. This capacitor is conveniently mounted on to the PCB terminal block that connects the transformer to the mains.

4. One final point: when using LED DVMs for the voltage/current indication, their ground line must be connected to the **positive** terminal of C12.

1

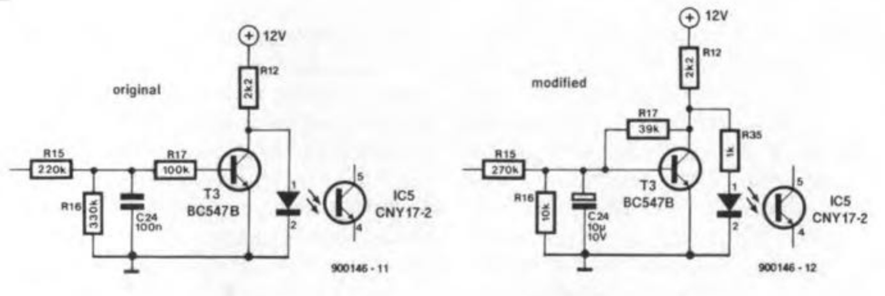

2

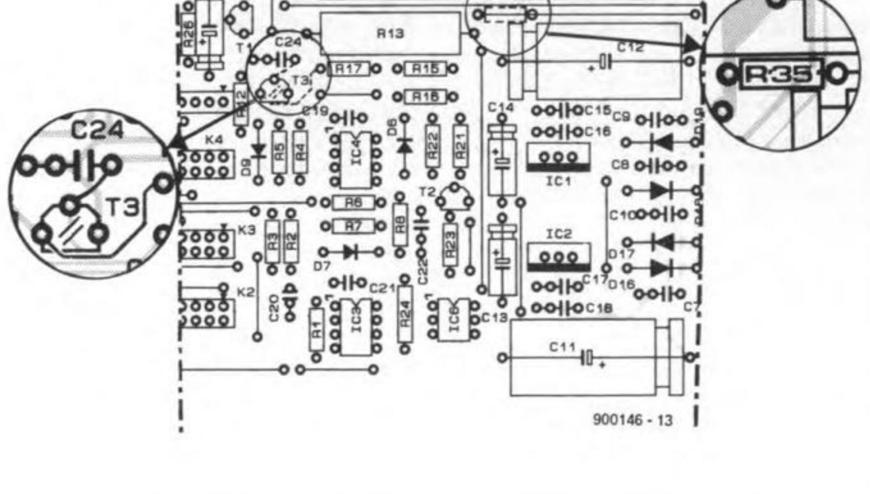

Hard disk monitor

December 1989

In some cases, the circuit will not reset properly because the CLEAR input of IC3A is erroneously connected to ground. Cut the ground track to pin 3 of IC3, and use a short wire to connect pin 3 to pin 16 (+5 V).

Microprocessor-controlled telephone exchange

October 1990

In some cases, the timing of the signals applied to IC17 causes a latch-up in the circuit, so that the exchange does not detect the state of the connected telephones properly. Solve this problem by cutting the track to pin 1 of IC17, and connecting pin 1 to ground (a suitable point is the lower terminal of C6).

The text on the fitting of wires on the BASIC computer board (page 19, towards the bottom of the right-hand column) should be modified to read: 'Finally, connect pin 6 of K2 to pin 7 of IC3 ($\overline{Y7}$ signal).'

S-VHS/CVBS-to-RGB converter (2)

October 1990

The capacitor marked 'C37', next to R21 on the component overlay (Fig. 7b and ready-made printed circuit board), should be marked 'C39'.

In case they are difficult to obtain locally, inductors type 119-LN-A3753 (L1) and 119-LN-A5783 (L2) may be replaced with the respective types 119-ANA-5874HM and 119-ANA-5871HM, also from Toko, Inc. Suggested suppliers are Cirkit Distribution Ltd., and C-I Electronics.

EPROM simulator

December 1989

Counters IC3 and IC4 may not function properly owing to a too low supply voltage. This problem may be solved by replacing IC12 with a 7806. Alternatively, use BAT85 diodes in positions D1 and D2.

Programmer for the 8751

November 1990

The ready-programmed 8751 for this project is available at £35.25 (plus VAT) under order number **ESS 7061**, not under order number ESS 5951 as stated on the Readers Services pages in the November and December 1990 issues.

909508 - II

DUBBING MIXER EV7000

PART 2: CIRCUIT DESCRIPTION (CONTINUED) AND CONSTRUCTION

WITH reference to the circuit diagram, Fig. 2 in Part 1 of this article, the microphone signals are applied to the circuit either via BU1 or BU7 and fed to the non-inverting (+) input, pin 3, of IC1A. Capacitor C2 suppresses noise, while potential divider R2-R3-R4 sets the bias voltage via R5. Capacitor C3 acts as a buffer.

The d.c. voltage gain is determined by the ratio (R6+R7+R8)/R6 and lies in the range of 20 dB to 40 dB. Like C2, C6 is included to suppress noise. The other capacitor in the amplifier, C4, decouples the direct voltage. When toggle switch S1 is open, the lower cut-off frequency is set to about 200 Hz to achieve rumble and floor noise suppression. When the switch is closed, the frequency range starts at about 20 Hz.

The output of IC1A, pin 1, drives inverting amplifier IC1B via R9. Opamp IC1B provides a gain of about 30 dB, and its output, pin 7, supplies a sufficiently strong speech signal for further processing in IC2. Preset P8 allows the gain of the first stage, IC1A, to be set to match the microphone signal level.

The next major part of the circuit takes care of the control of the fading mixer. The non-inverting (+) input, pin 3, of opamp IC5A is provided with an adjustable trigger signal via R3. The trigger level defines the point at which the microphone signal is loud enough to start a fade-in operation. The inverting (–) input of the opamp, pin 2, receives its signal from the output of IC1B, pin 7, or PCB terminal E. The amplified microphone signal is available there. When the microphone signal reaches the trigger level, the output voltage of IC5A changes from high to low. This causes capacitor C46 to be rapidly discharged via diode D2. Set to the position shown in the circuit diagram, switch S2 feeds the control voltage supplied by preset R43 to the non-inverting (+) input of IC5C. The control voltage is compared with the voltage across C46. While the capacitor discharges, the output of IC5C changes from low to high (approx. 9 V). Consequently, the volume control, R11, is fed via potential divider R46-R47, so that the microphone channel is enabled.

At this point, we revert briefly to the setting of the DELAY potentiometer, R43. The further its wiper is turned towards R42, i.e., clockwise, the longer it takes before the voltage across C46 exceeds that set with R43. This charging time forms the delay used to disable the microphone signal, following the end of the announcement. The other two positions of S2 allow the microphone signal to be passed or blocked continuously, i.e., the level-controlled fader works only in the switch position shown in the circuit diagram.

LED D4 lights when the microphone is enabled. It is driven by the output of IC5C, pin 7, via emitter follower T1 and series resistor R50.

As described, IC5C is a digital switch, i.e., its output is either high (microphone signal enabled), or low (microphone signal disabled). In the latter condition, capacitors C47A-C47B are charged via resistor R48 and diode D5. This type of circuit configuration is called a Miller integrator. The output voltage at pin 8 rises linearly to the maximum level allowed by the limiting circuit in IC5D. Potential divider R51-R52 feeds the volume control, R25, and enables the linearly rising voltage to provide a slow, smooth, fading-in of the music signal.

When the output of IC5C, pin 7, goes high, capacitors C47A-C47B are charged via R49 and D6. Consequently, the output voltage of IC5D drops, so that the music signal is faded out. One charge path of C47A-C47B is always blocked by one of the two diodes, D5 or D6. Two anti-series connected electrolytic capacitors are used here to handle the full voltage swing in both directions.

The intensity with which LED D7 lights indicates the progress of the fade-in and fade-out operations on the music channel.

Opamp IC5B compares the microphone signal at the output of IC1B, pin 7, with a reference level at PCB terminal A. As soon as excessive signal levels are detected, the 'peak Mic' LED lights.

Comparators IC7A to IC7D operate in a similar manner. The output voltage of the left channel is fed to the non-inverting inputs, pins 3 and 5, of comparators IC7A and IC7B, via R37 (PCB terminal F). The other input of each comparator is held at a reference level set up with potential divider R54-R55-R56. The values of these resistors enable IC7B to toggle when the signal level is still 30 dB below the maximum output voltage. This means that the 'OK' LED lights almost continuously to signal that a sufficiently high signal level exists to guarantee the best possible signal-to-noise ratio. The 'peak' LED, however, should preferably remain off. When it lights, the input signal level is approaching the absolute maximum. The circuit around IC7C and IC7D is identical to that around IC7A and IC7B. Its input voltage, however, is provided by the right-hand channel via R22. The use of two pairs of level indicators allows each channel to be monitored separately to avoid distortion at all times.

The circuit is powered by a 12-V, 300 mA mains adapter, connected to a 3.5-mm jack socket, BU6, on the rear panel of the enclosure. Diode D1 provides voltage reversal protection, while capacitors C43, C44 and C45 form buffers and prevent oscillation. A 10-V regulator is used in position IC6.

Construction

The dubbing mixer is built on two printed-circuit boards. These accommodate all active and passive components, including the potentiometers and the sockets. The two toggle switches are the only external components.

The printed-circuit boards are populated as shown by the component overlays and the parts list. It is best to start with the low-profile parts. Fit solder terminals ST1 to ST5 for the connection of the toggle switches.

Bend the terminals of the seven LEDs at right angles at a distance of about 5 mm from the body. Fit LEDs D8 and D10 at a height of about 5 mm above the board. Fit D3, D4 and

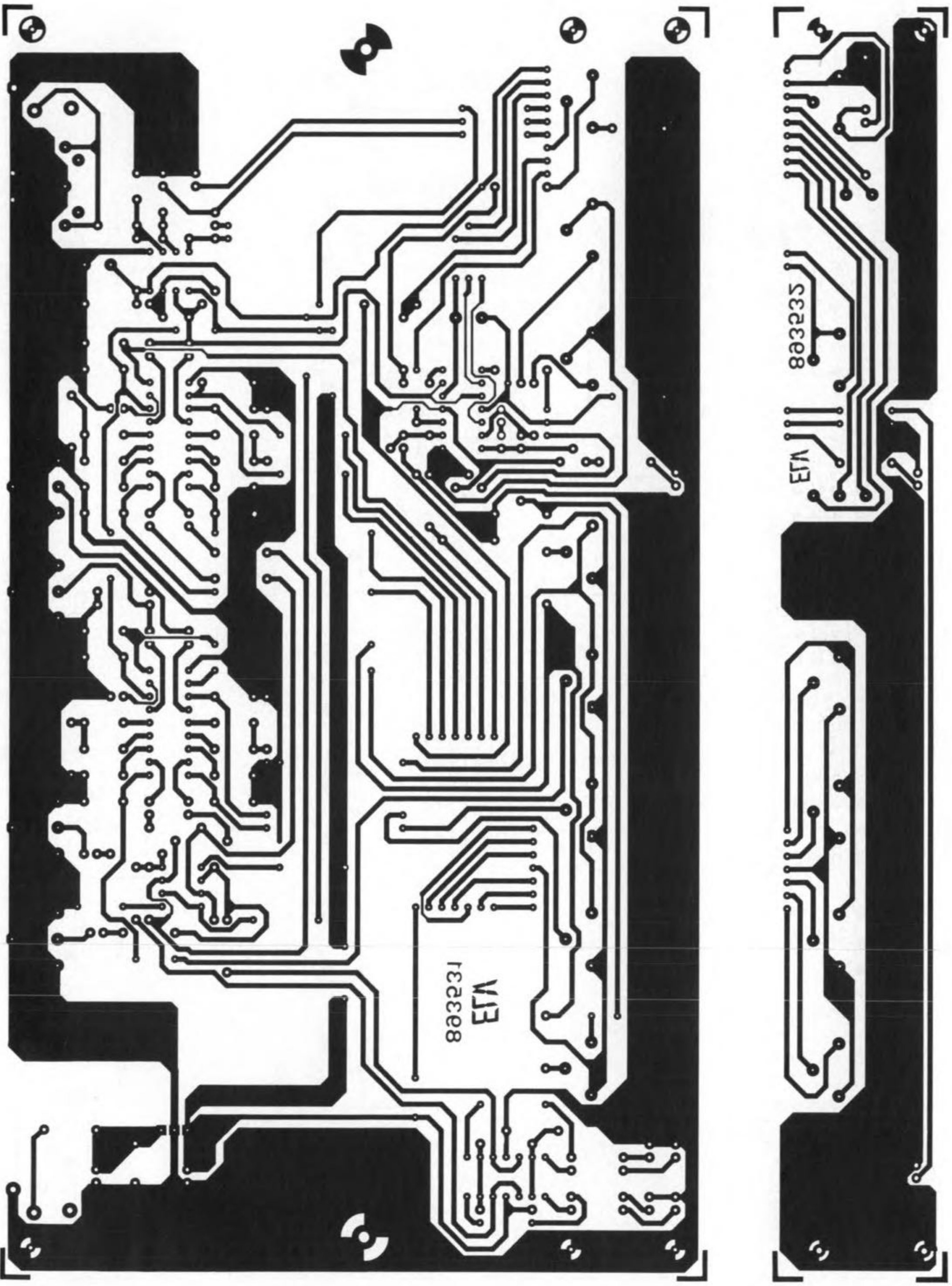

Fig. 3a. Track layouts (mirror images) of the motherboard (left) and the potentiometer board (right).

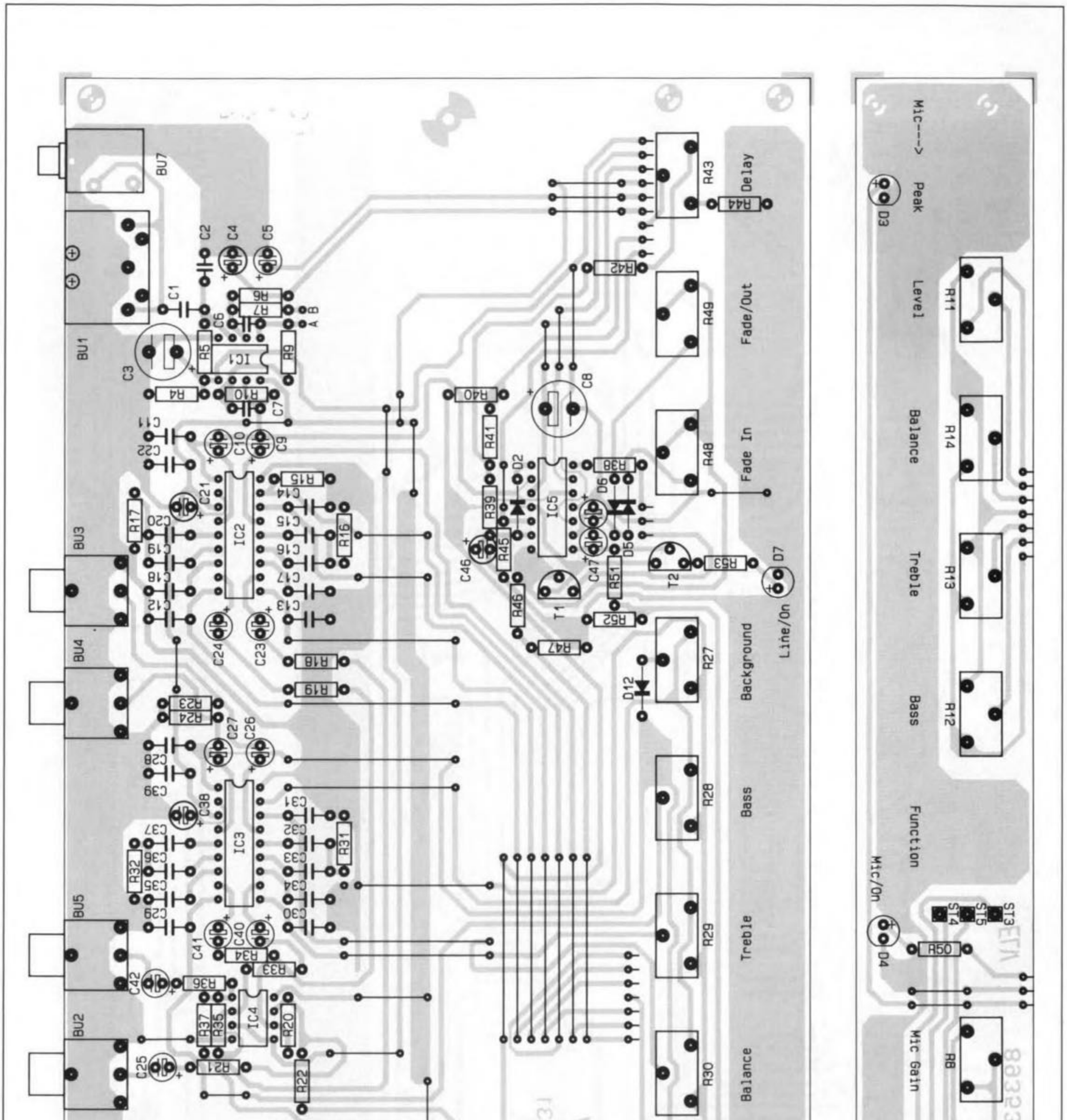

Fig. 3b. Component mounting plan for the motherboard (left) and the potentiometer board (right).

COMPONENTS LIST

content of kit supplied by ELV

Resistors:

2	100Ω	R21;R36
1	470Ω	R42
9	1kΩ	R6;R9;R38;R50; R53;R57–R60
1	1kΩ2	R1
3	2kΩ2	R2;R15;R44
1	3kΩ3	R4
1	3kΩ9	R40
1	8kΩ2	R41
17	10kΩ	R7;R16–R20; R22;R26; R31–R35;R37; R46;R47;R51;R52
1	18kΩ	R55
1	27kΩ	R54
1	33kΩ	R10
1	47kΩ	R56
1	56kΩ	R5
2	100kΩ	R23;R24
1	470kΩ	R39
1	1MΩ	R45
1	2kΩ2 preset H	R27
2	10kΩ preset V	R3;R43
8	47kΩ preset V	R11–R14;R25; R28–R30
1	100kΩ preset H	R8
2	250kΩ preset V	R48;R49

Capacitors:

1	22pF	C6
2	100pF	C2;C7
4	15nF	C17;C18;C34;C35
1	47nF	C44
8	56nF	C15;C16;C19; C20;C32;C33; C36;C37
8	100nF	C11–C14;C28–C31
2	220nF	C22;C39
1	330nF	C1
1	1µF 16V	C4
4	2µF2 16V	C9;C10;C26;C27
4	4µF7 16V	C23;C24;C40;C41
7	10µF 16V	C5;C8;C25;C42; C43;C45;C46
2	22µF 16V	C47a;C47b
3	100µF 16V	C3;C21;C38

Semiconductors:

2	TDA1524	IC2;IC3
2	TL082	IC1;IC4
2	LM324	IC5;IC7
1	7810	IC6
2	BC548	T1;T2
1	1N4001	D1
4	1N4148	D2;D5;D6;D12
7	LED, red, 3-mm	D3;D4;D7–D11

Miscellaneous:

2	3.5-mm jack socket for PCB mounting	BU6;BU7
1	5-way DIN socket for PCB mounting	BU1
4	phono socket for PCB mounting	BU2–BU5
2	miniature SPDT switch	
5	solder pin	
8	PCB spacer 15-mm	
6	PCB spacer 5-mm	
4	M3×50 screw	
2	M3×10 screw	
16	M3 nut	
1	motherboard	
1	potentiometer board	
1	ABS enclosure	

screened wire, approx. 10 cm

silver-plated wire, approx. 210 cm

A complete kit of parts for the dubbing mixer is available from the designers' exclusive worldwide distributors:

ELV France
B.P. 40
F-57480 Sierck-les-Bains
FRANCE

Telephone: +33 82837213
Facsimile: +33 82838180

D7 at a height of about 9 mm above the board, and D9 and D10 at a height of about 15 mm above the board. The distance is measured from the centre of the diode body.

The connection between the motherboard and the potentiometer board is made by 19 36-mm long pieces of silver-plated wire. Insert these wires into the motherboard, and position each of them so that the wire end protrudes about 1 mm from the solder side of the motherboard. Solder the wires to the respective spots. Do not solder the free ends to the potentiometer board as yet.

Solder the end of a 100-mm long screened wire to terminals A and B on the motherboard. Connect the screening to terminal A, and the core to terminal B. The free end of this wire is later connected to the potentiometer board.

Carefully inspect the two boards for dry solder joints, short-circuits between spots, and incorrectly located components. Next, place the motherboard over the two mouldings on the bottom half of the enclosure. Mark and drill the six 3.5-mm holes for fixing the PCB. Remove the motherboard. At the rear side of the bottom cover, insert two M3×10 mm screws from the outside into the two associated holes, and secure each of them with a nut at the inside. Similarly, insert a M3×50 mm screw into each of the four holes at the front side, and secure each one with a nut at the inside. Next, place 5-mm long PCB spacers over the screws. Place the motherboard over the six screw ends. At the same time, fit the rear plate, which is secured to the PCB by the sockets. Fix the motherboard at the rear side by securing the two nuts. Each of the four 50-mm long screws is provided with two 15-mm long PCB spacers, which are secured with a M3 nut.

Align the potentiometer board over the 19 wire ends at the front side of the motherboard. Use M3 nuts to secure the potentiometer board on the four screw ends. Next, carefully solder the 19 wire ends to the spots at the track side of the potentiometer board.

Put the front panel in place, and check the positions of the seven LEDs. Remove the knurled nuts from the shafts of the two switches, and turn the hexagonal nuts until they are at about half-way the shafts. Insert each shaft from the inside into the respective hole in the front panel, and secure the switch with the knurled nut. If necessary adjust the position of the hexagonal nut, so that the shaft does not protrude too far from the front panel.

Use short pieces of silver-plated wire to connect the lower terminal of the left-hand toggle switch (next to LED D4) to ST4, the centre connection to ST5, and the top connection to ST3. Similarly, connect the centre terminal of the right-hand toggle switch to terminal ST4, and the lower terminal to ST2.

Finally, insert the 14 spindles into the presets, and mount the associated knobs. The ends of the spindles are gently pushed into the holes in the preset until they lock. After assembling the top and cover plates of the enclosure, the dubbing mixer is ready for use. Alignment is not required! ■

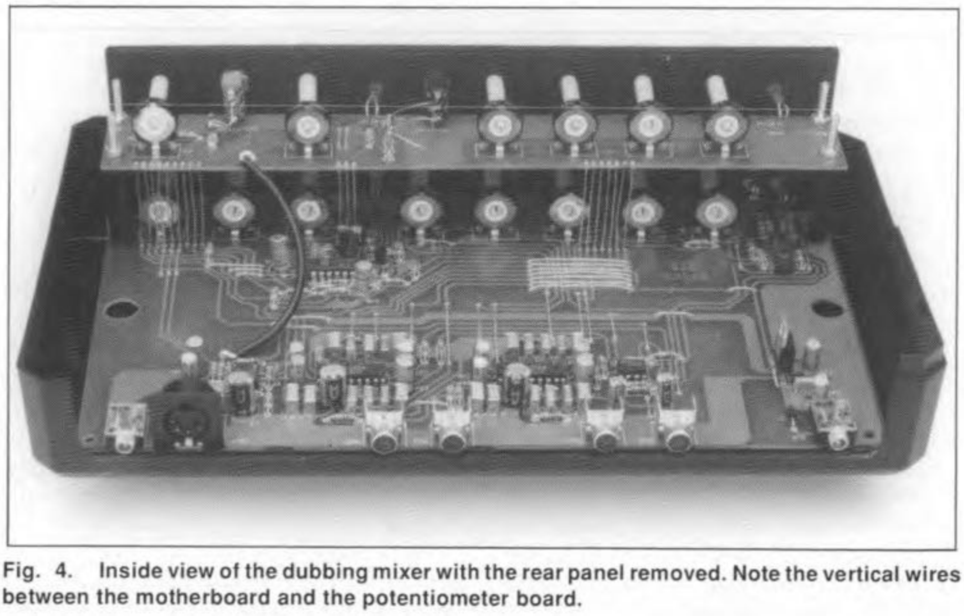

Fig. 4. Inside view of the dubbing mixer with the rear panel removed. Note the vertical wires between the motherboard and the potentiometer board.

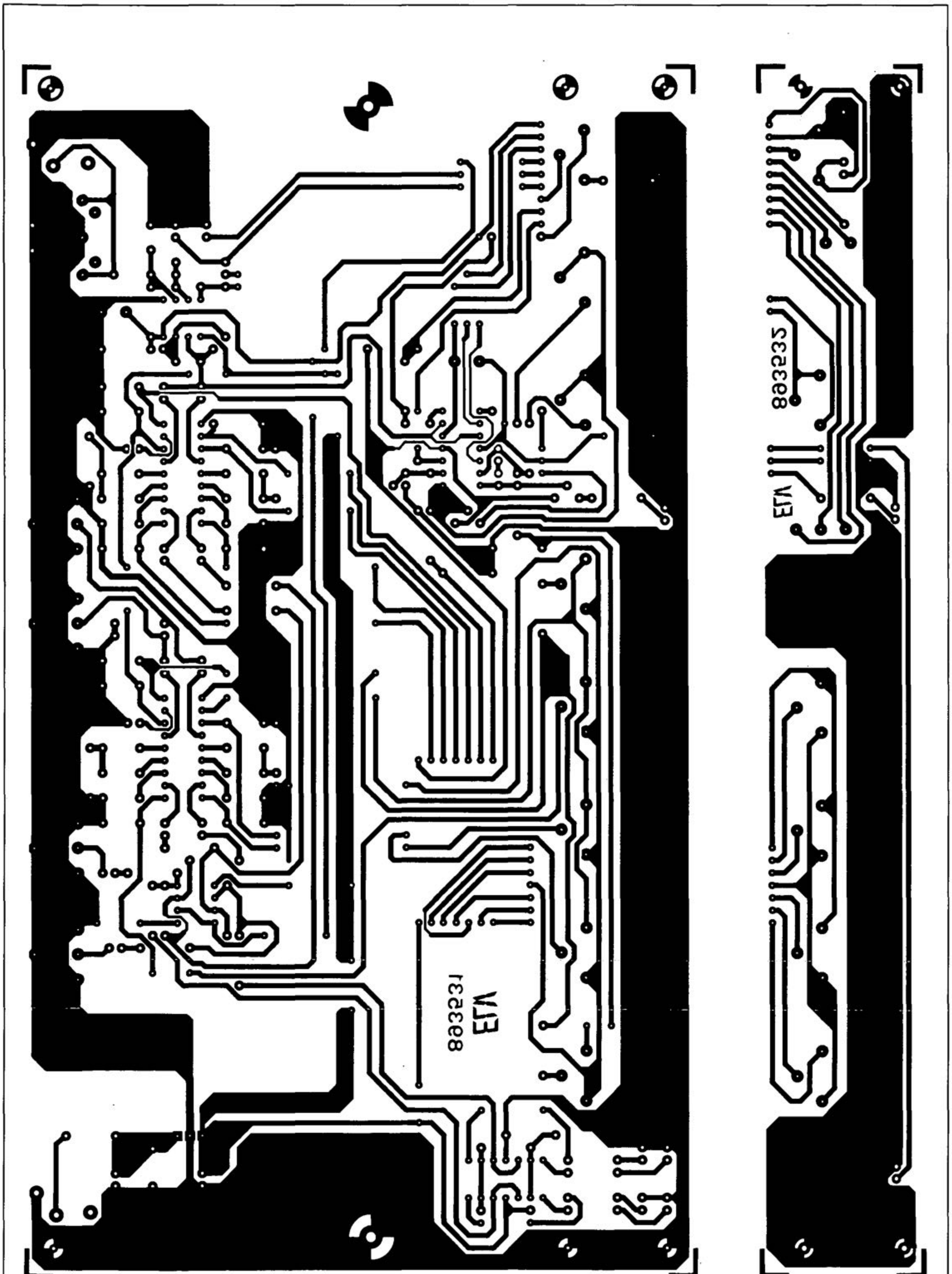

Fig. 3a. Track layouts (mirror images) of the motherboard (left) and the potentiometer board (right).

IN QUEST OF A PANGRAM – FINAL PART

900103 - IV

by Lee C.F. Sallows

Bimagic pairs and bananagrams

At a still later stage, I constructed a second set of matrix cards representing number-words in Dutch. Besides another series of ordinal pangrams, one of the fruits of this excursion into a new language was:

Dit autogram bevat vijf *a*'s, twee *b*'s, twee *c*'s, drie *d*'s, zevenenveertig *e*'s, zes *f*'s, vijf *g*'s, twee *h*'s, veertien *i*'s, vijf *j*'s, een *k*, twee *l*'s, twee *m*'s, zeventien *n*'s, twee *o*'s, een *p*, een *q*, zes *r*'s, vierentwintig *s*'s, achttien *t*'s, twee *u*'s, elf *v*'s, negen *w*'s, een *x*, een *y* en vijf *z*'s.

Happlily, this furnishes the first-ever truly impeccable magic translation, an earlier find being:

This autogram contains five *a*'s, one *b*, two *c*'s, two *d*'s, thirty-one *e*'s, five *f*'s, five *g*'s, eight *h*'s, twelve *i*'s, one *j*, one *k*, two *l*'s, two *m*'s, eighteen *n*'s, sixteen *o*'s, one *p*, one *q*, six *r*'s, twenty-seven *s*'s, twenty-one *t*'s, three *u*'s, seven *v*'s, eight *w*'s, three *x*'s, four *y*'s, and one *z*.

Notice that "*en*" is now reproduced as a fully-fledged "*and*". Strictly, it is inaccurate to speak of a translation in such cases, since the number-words themselves are not (in general) preserved. A preferable expression might be *transcription*. Another point, you might say, is that translations are inherently interpreter-dependent, whereas it is hardly likely that personal preference would influence an outcome here.

Hardly likely, yet the local curvature of logological space can warp judgement much as it can warp a sense of humour. Here, for instance, is a different English rendering of the same Dutch sentence, which is nevertheless another flawless magic transcription:

This autogram contains five *a*'s, one *b*, two *c*'s, two *d*'s, twenty-six *e*'s, six *f*'s, two *g*'s, four *h*'s, thirteen *i*'s. one *j*, one *k*, one *l*, two *m*'s, twenty-one *n*'s, sixteen *o*'s, one *p*, one *q*, five *r*'s, twenty-seven *s*'s, twenty *t*'s, three *u*'s, six *v*'s, nine *w*'s, five *x*'s, five *y*'s, and one *z*.

Sceptics may care to verify this assertion, barely credible at first sight. Once you have done so, it will be clear that even *magic* translations may depend upon the whim of an interpreter.

What is disturbing here is that the two English autograms, although differing in the number-words they use, exhibit indistinguishable texts. Or, to put it the other way around: although identically worded, the sentences list different numbers of letters. Certain minds seem to balk at this confrontation with a single text composed of thirty-one *e*'s this time and twenty-six the next. I have even known the delight of hearing someone patiently explain to me that such a thing can only be a patent logical impossibility!

Logic, however, should never be confused with logologic. The pair of autograms above is, of course, no more than a single text to which two solutions have been found. In concrete terms: having halted at a first solution, the machine was set running again so as to examine all remaining combinations and in this case succeeded in finding another one. The possibility of such *bimagic* sentences had been in my head from the first. Little did I dream that such a pair might also have a magic Dutch translation! As usual, though, the unexpected bonus is only a spur to greed, and one ends up regretting that the foreign version is not bimagic, too. Discovery of a magic quadruple is an obvious goal for future research.

Though at first sight twisty, the cunning interlock between bimagic pairs is neatly brought out through a rather whimsical example:

This angram contains four *a*'s, two *b*'s, two *c*'s, one *d*, twenty-seven *e*'s, eight *f*'s, four *g*'s, five *h*'s, ten *i*'s, one *j*, one *k*, one *l*, two *m*'s, twenty *n*'s, fifteen *o*'s, one *q*, six *r*'s, twenty-seven *s*'s, eighteen *t*'s, five *u*'s, five *v*'s, seven *w*'s, three *x*'s, four *y*'s, one *z*, but no -.

This angram contains four *a*'s, two *b*'s, two *c*'s, one *d*, twenty-seven *e*'s, eight *f*'s, four *g*'s, five *h*'s, eleven *i*'s, one *j*, one *k*, two *l*'s, two *m*'s, twenty *n*'s, fifteen *o*'s, one *q*, six *r*'s, twenty-seven *s*'s, nineteen *t*'s, five *u*'s, six *v*'s, eight *w*'s, three *x*'s, four *y*'s, one *z*, but no -.

Abstracting the non-overlapping items for comparison shows:

ten *i*'s	eleven *i*'s
one *l*	two *l*'s
eighteen *t*'s	nineteen *t*'s
seven *w*'s	eight *w*'s.

The four numbers on the right are (by coincidence) all one greater than those on the left: a difference of one *i*, one *l*, one *t*, and one *w*. Cancelling common letters in the two lists will leave precisely that: the text on the right contains an extra *i*, *l*, *t*, and *w*. Differences at the meaning level exactly parallel those at the typographical level. Replacing one list with the other is thus an autogram-preserving change. A similar but more complicated pair of lists can be extracted from the previous example.

Notice that, despite suggestive associations, a pair of sublists so derived can never comprise true *anagrams* (they cannot contain exactly the same letters). The letter content being identical, the *numbers* named could only be the same, and this is not the case. Taking into account both their slippery character and the *ban* on *anagrams*, I propose a special name for these curiosities: *bananagrams*. Beside their occurrence in bimagic autograms, a search for bananagrams could easily form a separate study in its own right.

How rare are bimagic cases? Of the roughly one in eight initial texts to yield a simple autogram, again something like one in eight of these turn out to have dual solutions. Is this coincidence, or might a theory be developed for predicting it? One might suppose the frequencies will change with different kinds of text, and yet experiments in Dutch give very similar results. Trimagic autograms (and their associated trimagic bananagrams) are naturally even rarer. Several hundred runs with the machine have located only one (with the unstimulating text, "this twenty-first pangram scored . . ."). A finer example of the polymagic genre is:

This pangram tables but five *a*'s, three *b*'s, one *c*, two *d*'s, twenty-eight *e*'s, six *f*'s, four *g*'s, six *h*'s, ten *i*'s, one *j*, one *k*, three *l*'s, two *m*'s, seventeen *n*'s, twelve *o*'s, two *p*'s, one *q*, seven *r*'s, twenty-nine *s*'s, twenty *t*'s, five *u*'s, six *v*'s, eight *w*'s, four *x*'s, four *y*'s, and one *z*.

But this pangram tables five *a*'s, three *b*'s, one *c*, two *d*'s, twenty-nine *e*'s, six *f*'s, six *g*'s, eight *h*'s, eleven *i*'s, one *j*, one *k*, three *l*'s, two *m*'s, seventeen *n*'s, fourteen *o*'s, two *p*'s, one *q*, eight *r*'s, twenty-eight *s*'s, twenty-two- *t*'s, six *u*'s, four *v*'s, eight *w*'s, four *x*'s, four *y*'s, and one *z*.

The false modesty of the first is countered by the second one turning the tables!

So much then for the products of the pangram machine. Far from everything has found room for inclusion here. Aside from space considerations, the charm of such baubles is limited, one autogram soon seeming much like another. A few enthusiasts will continue to find fascination, I suppose, and indeed new topics in logology remain to be explored. One can only surmise what developments the future may reveal. Perhaps the magic sentences to come will possess a potency beside which these early essays in the craft will pale. That is certainly to be expected.

Among many possibilities that will suggest themselves to logophiles is the extension beyond letter-level autograms to those enumerating every sign employed. There is a point worth raising in this connection. In the example shown at the start of this article, the listing of signs uses full names such as "comma" and "hyphen". Seen retrospectively, this now seems less expedient than bringing them into line with the letters by reproducing the sign itself and adding an *'s*. Differences in British and American usage are among the recommendations for this change. Strictly speaking, however, quotation marks (or points) are demanded in using a sign as a name for itself. When this is done, the apostrophe can be dispensed with and we arrive at: "... five '*a*'s, two '*b*'s, ... one '*z*', twenty-seven ','s, twenty-three '“'s, seven '-'s &, last but not least, two '&'s, for instance. This is, I believe, the most natural and formally correct method, and I recommend it as a notational standard to be adopted by others. The desirability of a universal system will be apparent to interested parties.

Having said that, it is worth noting that the impulse toward sign-enumerating texts comes from a striving for completeness. This ambition can be fulfilled so long as conventional signs are treated as the atomic constituents of printed text. Atoms can be split, however, much like hairs. Reductionists will see the dot over the *j* as a typographic electron spinning in jeostationary orbit above its nucleus. As such, it will qualify for separate listing. Idealists will insist that ligatures were made in Heaven, and what God hath joined may no man tear asunder. Still others may contemplate descent to more hellish levels:

Perhaps my hesitation in giving an exact definition of the term "autogram" will now be more explicable. On consideration, it is probably a good idea to confine use of the expression to normal practice and leave the subatomicists to invent their own labels.

Aside from practical constraints, the initial text used in searching for an autogram is the sole determinant of success or failure. Time was when rambling and even dubious phrasing passed muster. Kousbroek's pangram has changed all that; prolix or otherwise suspect formulations can no longer expect uncritical acclaim. At the other pole, however, is the prospect of zero-text autograms—simple, self-enumerating lists, without even the "and" at the end. Since the ten non-critical letters are excluded, an inventory of this kind would comprise at most sixteen items. The shortest such list will in a sense be the ultimate autogram.

Also relevant in this context, though of less interest to logophiles perhaps, are *self-enumerating numbers*. A digit can never be catalogued as occurring zero times, so "0" can be used as a quotation mark to distinguish use from mention.

9000302020302090

—that is to say, nine zeros, three twos, two threes, and two nines. On analogy with pangrams, pandigits can be found, too:

210007010402010302040
10501060207010801090

The 0-convention is admittedly arbitrary, but even if rationalized it would be hasty to suppose these oddities of any mathematical significance.

Still further contingencies for the future are metamagic autograms in which both words and letters come up for self-enumeration. More complicated monsters will present themselves to thought. Less fanciful are pairs of mutually-enumerating texts or even longer loops, although the difficulties these impose should not be underrated. A dyad such as

The sentence on the right contains ...	The sentence on the left contains ...

can not be handled independently. In effect, a magic combination must be found involving twice as many terms. Even so, the second sentence is a straightforward function of the first (or vice versa), so that the problem need not imply construction of a machine having twice as many channels. I leave it to readers to explore the ramifications of this interesting puzzle. This brings me to a final word on the pangram machine.

Disconcertingly, more than one person who has seen the machine seems to have thought that at root it is "really" a computer. That is a misunderstanding. The term *computer* is now well established; it refers to a device incorporating a stored program of data and instructions. There is nothing in the pangram machine corresponding to a central processing unit (CPU), an arithmetic logic unit (ALU), a memory, or a program.

In fact, as I subsequently discovered, the machine is a closer cousin to a "mechanical number sieve" invented by D.H. Lehmer in the 1920s. His device shares two things in common with mine. One is the basic odometer mechanism which sees to it that *combinations* of parameters are systematically called up for testing. The other is a *parallel* monitoring system that signals the odometer to halt only if every parameter simultaneously meets a certain (not necessarily identical) condition. In Lehmer's apparatus, the former is a motor-driven set of non-concentric parallel gears with holes drilled at special points on their periphery. The monitoring system is a light beam and photocell arrangement that disconnects the motor when an alignment of holes is detected. The positions of these holes represent various finite arithmetic solutions to an equation. A combination of such cases can yield a general solution. Note well the condition to be satisfied here (hole present at a certain location); in

Slimmerick*

by Lee Sallows

"Here's a quirky quotation," said Quine, 30
"That precedes a prediction of mine: 29
'If a limerick's good 16
Then its syllables could 21
Only add up to be thirty-nine' ... " 23

Quipped a self-referentialist (Me), 28
"Self-fulfilling is my prophecy: 26
If *this* limerick ends 18
As its author intends 18
Then its word count will reach twenty-three!" 36

Answered Quine, "... I'd been waiting for you, 32
On discovering *letters* too few: 26
For I'd already guessed 19
Your whole poem's expressed 23
In *three hundred and seventy-two*!! 27

372

---

* "Slimmerik" is Dutch for a "cunning one".
The first two lines of the poem carry an allusion to the contemporary philosopher W.V. Quine's famous rendering of Epimenides' paradox "This sentence is false":

> "Yields a falsehood when appended to its own quotation" yields a falsehood when appended to its own quotation.

Here the subject of the sentence—the phrase in quotes—*is* appended to its own quotation; the resulting sentence is, in fact, a quirky quotation preceding a prediction that the operation will yield a falsehood. Quine's object was to achieve self-reference while avoiding the expression "this sentence" which, it has been argued, cannot really refer to anything.

the pangram machine the criteria to be met (agreement with claimed numbers) are themselves a function of the parameters. Readers interested in further details of Lehmer's sieve will find an excellent and entertaining account in Albert H. Beiler's *Recreations in the Theory of Numbers* (Dover Books).

A challenge

The fact that two people working independently on quite different problems should have evolved closely similar mechanisms for their solution is remarkable. It suggests that the principle involved may have yet broader application. Indeed, I would like here to advance the view that the self-arresting odometer technique deserves a wider familiarity. There is a certain class of brute-force search for which it is a fundamental algorithmic structure. That is not to say I am advocating the construction of purpose-built machines (however enjoyable that might be). My idea is than an electronic *combination sequencer*, as I propose calling it, might easily comprise a standard hardware unit for integration into a (parallel) computer. This is not the place to elaborate on the idea. Suffice it to say that such a union could combine the speed of the former with the flexibility of the latter to produce a universal machine capable of accepting search problems from very different domains.

The increase in speed that both (a later version of) Lehmer's device and the pangram machine show over a conventional computer is directly attributable to their *parallel processing*. Of course, non-conventional or "super" computers using parallel processing also exist. This is worth mentioning since in *Scientific American* A.K. Dewdney has given wide publicity to a remark of mine which seemed less reckless in its original context within a letter to Martin Gardner: "I bet ten guilders [about three pounds] nobody can come up with a self-enumerating solution to the sentence beginning 'This computer-generated pangram contains . . . and . . .' *within the next ten years*." Parallel processors, I should like to emphasize, are excluded from this wager.

Human perversity being what it is, not improbably some will not rest until I have been made to eat those words (it is incredible how seriously some people can take such artless taunts!). I can only hope a respectable interval will be allowed to elapse before someone succeeds. In fairness, it must be said that much of the data contained herein could be put to use in greatly narrowing the area of a brute-force search. Frankly, I have often wondered how far one might go in returning to the computer armed with the insights and information gleaned via the machine. Besides this, from the present perspective it is clear that a cooler analysis of the problem at the very beginning would have saved me a great deal of frustration later. Furthermore, subsequent discussion with various mathematicians and computer scientists make it clear that I am very far from having explored all software approaches; in particular, a modified version of the iterative algorithm originally tried is widely regarded as holding great promise. Leaving aside the wager, my warmest encouragement goes out to any who might like to pursue this question. There still remain a host of pangrams yet to be produced in all the languages remaining. Of even keener interest, though, will be to learn of any new approaches pioneered.

Closing thoughts

An act of magic consists in doing what others believe impossible. Together with magic squares and the marvellous tessellations of Maurits Escher, autograms are among a class of objects that achieve their magical effect through creating an unbelievable *coincidence*. In the first, the coincidence is between row and column sums; in the second, between figure and ground shapes; in the third, it is between a message and its medium. These three are all examples of what Sigmund Freud (of all people) would have called *overdetermined* structures—overdetermined because they embody the simultaneous satisfaction of independent (sets of) criteria.

Of course there is already a discipline whose concern is with the creation of overdetermined textual structures: a highly technical field in which the distillation of meaning and the coalescence of form with content have ever been focal concepts. Its name is *poetry*. Let none suppose that anything but poetry has been our purpose here.

This epilogue contains three *a*'s, one *b*, two *c*'s, two *d*'s, thirty *e*'s, four *f*'s, two *g*'s, six *h*'s, ten *i*'s, one *j*, one *k*, two *l*'s, one *m*, twenty-one *n*'s, seventeen *o*'s, two *p*'s, one *q*, six *r*'s, twenty-seven *s*'s, twenty-one *t*'s, three *u*'s, five *v*'s, nine *w*'s, three *x*'s, five *y*'s, and one *z*. ■

This article has been reproduced by kind permission of Springer-Verlag, Heidelberg and New York.

References

Kousbroek, Rudy. *De Logologische Ruimte*, Amsterdam: Meulenhoff, 1984, pp. 135–53.

Dewdney, A.K. "Computer Recreations", *Scientific American*, October 1984, pp. 18–22.

Hofstadter, Douglas R. *Metamagical Themas*, New York: Basic Books, 1985, pp. 27–29, 845.

Sallows, L. & Eijkhout, V. "Co-descriptive Strings", *The Mathematical Gazette*, Vol. 70, No. 451, March 1986, pp. 1–10.

Sallows, L. "A New Type of Crossword Puzzle", *The American Mathematical Monthly*, Vol. 94, No. 7, Aug–Sept. 1987, p. 666.

```
  EAD A
  PUKE I.A
00 NEXT I
910 DATA 205.127.
920 DATA 43.62.0.
930 DATA 27.62.0.
940 POKE 16526.11
 50 POKE 16527.1
   PRINT#0."L
```

THE MISER'S T/R LOOP ANTENNA

900128

by Richard Q. Marris, G2BZQ

This is the story of a very small experimental table-top HF transmitting/receiving loop antenna of simple, low-cost construction. The word 'miser's' crept into the title while the design was roughed out initially, at which time it became apparent that a *miserly* £10 price tage should suffice to construct!

I have been interested in the design of small table-top transmitting/receiving loop antennas, using multi-turn loop configurations, instead of the generally accepted single-turn concept which is vastly larger, for several years. For convenience, the 80-metre (3500–3800 kHz) amateur band has been used for 'on the air' tests, though use on other HF bands could easily be accommodated.

Previous designs have always consisted of several side-by-side loop-turns supported on a square wood frame. For convenience, the multi-turn conductor has always been the outer screening of a coaxial cable, which is much easier to use than the more conventional forming/shaping of copper tubing. The last, and most successful, of these previous loops is shown in Fig. 1.

Although I have never used more than 10 watts transmitted RF output, this design has provided satisfactrory two-way communications throughout Europe, well into the USSR. And that was with the loop indoors standing on a table alongside the transmitter-receiver!

That particular loop consisted of three turns of coaxial TV cable, wound side by side on a 20×20 in. (50×50 cm) square wooden frame. It used a two-gang variable capacitor (C1-C2) for tuning, and C3 for impedance matching to the 50-ohm coaxial feedline. The main problems with this design were (1) the difficulty in rapid changing of frequency by more than a few kilohertz and (2) although the figure-of-eight radiation pattern (see Fig. 2) was ideal for reducing interference on a wanted signal, stations on the opposite compass bearing occasionally caused strong interference.

Little is documented on multi-turn loops, especially those for transmission purposes. Even now, over 50 years later, the *Admiralty Handbook of Wireless Telegraphy*, 1938 (Vol. 2) has the best documentation on multi-turn loops for reception in its large section on Direction Finding 'T'. The preceding section, 'R' (aerials, feeders, directional arrays) is also very useful. The handbook divides such loops into two distinct types: 'box' loops and 'pancake' loops. A box loop is symmetrical with the wire turns side by side as in Fig. 1. A pancake loop has the wire turns wound in a spiral. In both designs, the ideal shape is circular. The handbook states that in a pancake receiving loop "the total e.m.f. is the sum of the separate e.m.f.s in the loops, these being proportional to the dimension in each case. It is equivalent to one loop whose area is the sum of the individual areas, and gives zero signals when the plane is at right angles to the transmitter". In the absence of any further documentation it was, for convenience, assumed that a similar situation would apply if the loop was used for transmitting, providing a method could be found for feeding RF power into such an asymmetrical pancake or spiral loop.

This thinking led to the 'Miser's T/R loop' design shown in Fig. 4, whose simplified electrical circuit is showin Fig. 3: the familiar *L/C* tuned circuit, fed by coaxial cable, that can be found in most modern receivers and transmitters. A simplified design of the loop, together with its polar diagram, is given in Fig. 5. This shows only one turn of the multi-turn spiral. It will be seen that the maximum signal is on the outer high-current (I) turn, and the minimum on the inner high-voltage

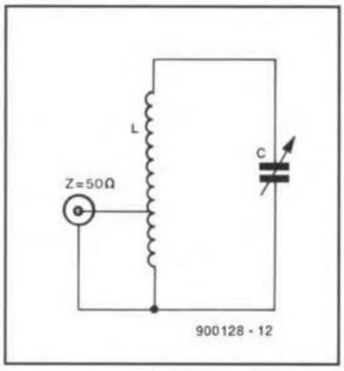

Fig. 3.

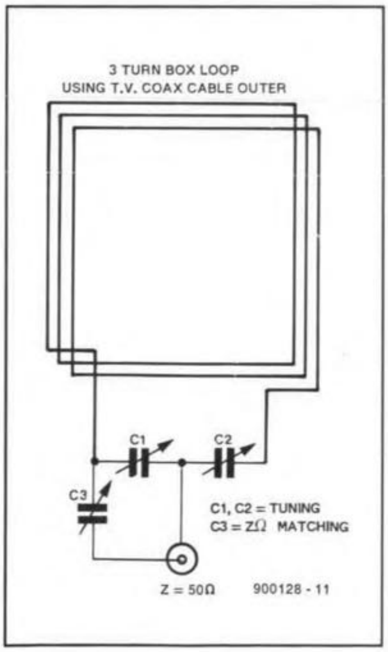

Fig. 1.

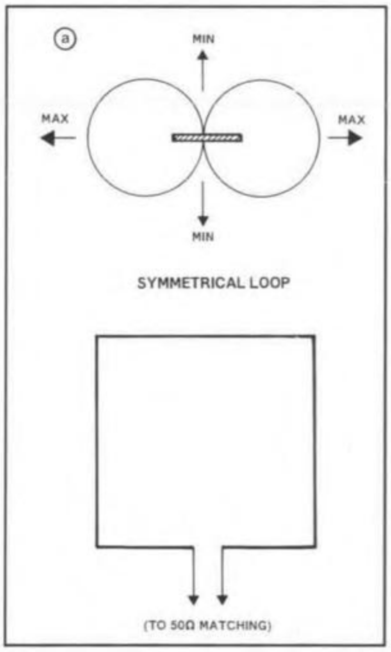

Fig. 2.

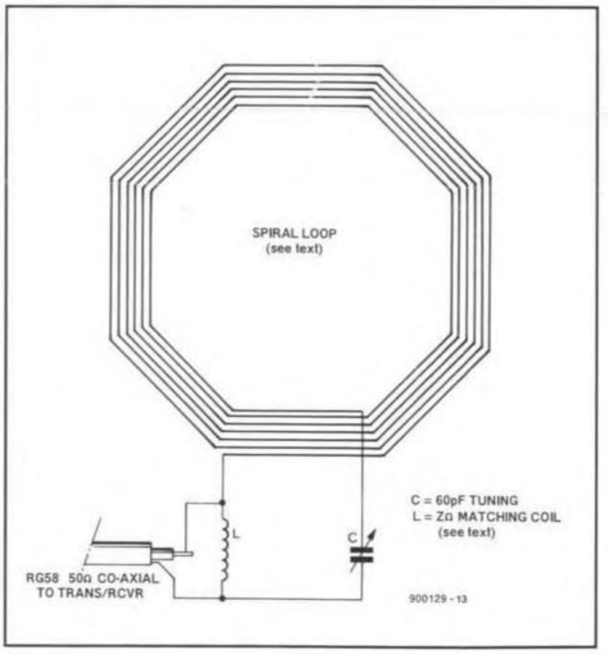

Fig. 4.

(E) turn. This gives a 'fish-like' radiation pattern, which is more pronounced if the loop wire ends are crossed at the bottom. It is clear that the forward gain has been increased substantially, whereas the backward gain has been reduced.

The polar diagram was plotted by applying a small signal to the spiral loop of Fig. 4 and placing a field-strength meter at a fixed distance. The loop was then rotated gradually and the relative field strength plotted. Since the measurements were taken indoors, the results are suspect owing to possible reflections from surrounding objects. Nevertheless, later on-the-air tests confirmed that the gain of the large lobe is substantially greater than that of a figure-of-eight pattern and that the backward gain is well down with a sharp dip in the centre: hence the 'fishtail' pattern.

The operating bandwidth is approximately ±20 kHz without adjusting the tuning capacitor. Furthermore, small adjustments of C enabled quick operation anywhere in the 3500–3800 kHz band.

An additional bonus is that the loop does not radiate or accept harmonics and does not cause television interference (TVI). In fact, it proved possible to operate a TV receiver from an indoor aerial at a distance of about 4 feet (1.2 metre) from the loop.

Construction

The assembly consists of $6^{1}/_{8}$ turns of spiral wire on an octagonal frame—see Fig. 7. The frame is secured to a simple base mount shown in Fig. 6, which also holds the impedance matching coil, *L*, and tuning capacitor *C*. This capacitor is mounted on a 2.5×2.5 inch (63×63 mm) perspex plate that is screwed to the vertical wood member. The only other item is a 4-foot (1.2 m) length of 50-ohm coaxial feedline (RG-58), which goes to the transmitter output.

Impedance matching coil *L* consists of 9 turns (1 inch = 25 mm dia.) of 16 SWG tinned copper wire mounted on two $^{3}/_{4}$ inch (19 mm) ceramic stand-off insulators of any available type. Close-wind it initially as 10 turns on a $^{7}/_{8}$ inch (22 mm) dia. mandril: this will spring out to the required 1-inch dia. The turns are then evenly spaced over a width of $2^{3}/_{8}$ inch (60 mm) and cut and bent to 9 turns with 1-inch (25 mm) legs.

The loop frame in Fig. 7 is of light-weight hardwood, made from an 8-foot (2.5 m) length of 21×9 mm Masons Timber Products moulded hardwood (available in most large DIY stores in the UK). Cut this into four lengths of 23 in. (584 mm), which are then notch jointed and glued as shown. Do not use softwood as this will distort. Both the frame and the base mount were teak-wood dyed. Seven $^{1}/_{16}$ inch (1.6 mm) holes are required at 0.25 in. (6.3 mm) centres, commencing 0.25 in. from all the boom ends—see detail on drawing. Note that all 7 holes are used in the bottom two arm ends, but only the inner 6 on the other 6 arms.

The wire used for the loop is PVC 16/0.2 mm, 1 kV r.m.s., 3 A at 70 °C, 1.6 mm outside diameter. Start with 38 ft (11.5 m). Begin the winding at the outer hole (no. 7) of the bottom left-hand boom with a knot, leaving a 6-in. (15 cm) tail (which will be cut back later). Proceeding anti-clockwise, thread the wire through the outer hole (no. 7) of the bottom right-hand boom, and then to no. 6 hole of the other booms in turn. Then proceed inwards, in a spiral, until you arrive at the inner hole of the bottom right-hand boom. This makes $6^{1}/_{8}$ turns in all.

At this stage, the turns are tightened progressively, and then terminated with another knot, again leaving a 6-in. tail.

The winding operation is tedious and is best carried out by laying the frame flat on a table with the 38 ft of wire laid out on the floor. Proceed by threading the wire completely through one turn at a time and then tightening it.

The loop/frame winding is secured with wood screws to the vertical of the base unit. The dotted datum line can be seen near the centre of Fig. 7.

With an eye on Figures 4 and 6, solder the loop ends to *L* and *C*, cutting back the tails as required. It is imperative that the outer end of the loop goes to the top of the coil and the inner to the stator of the capacitor. The RG58 feedline is then connected and secured with

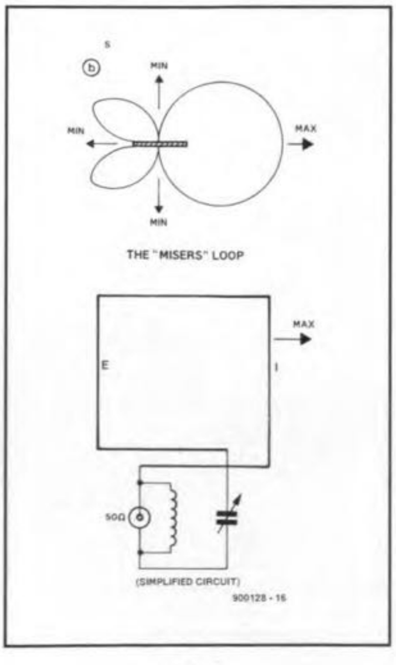

Fig. 5.

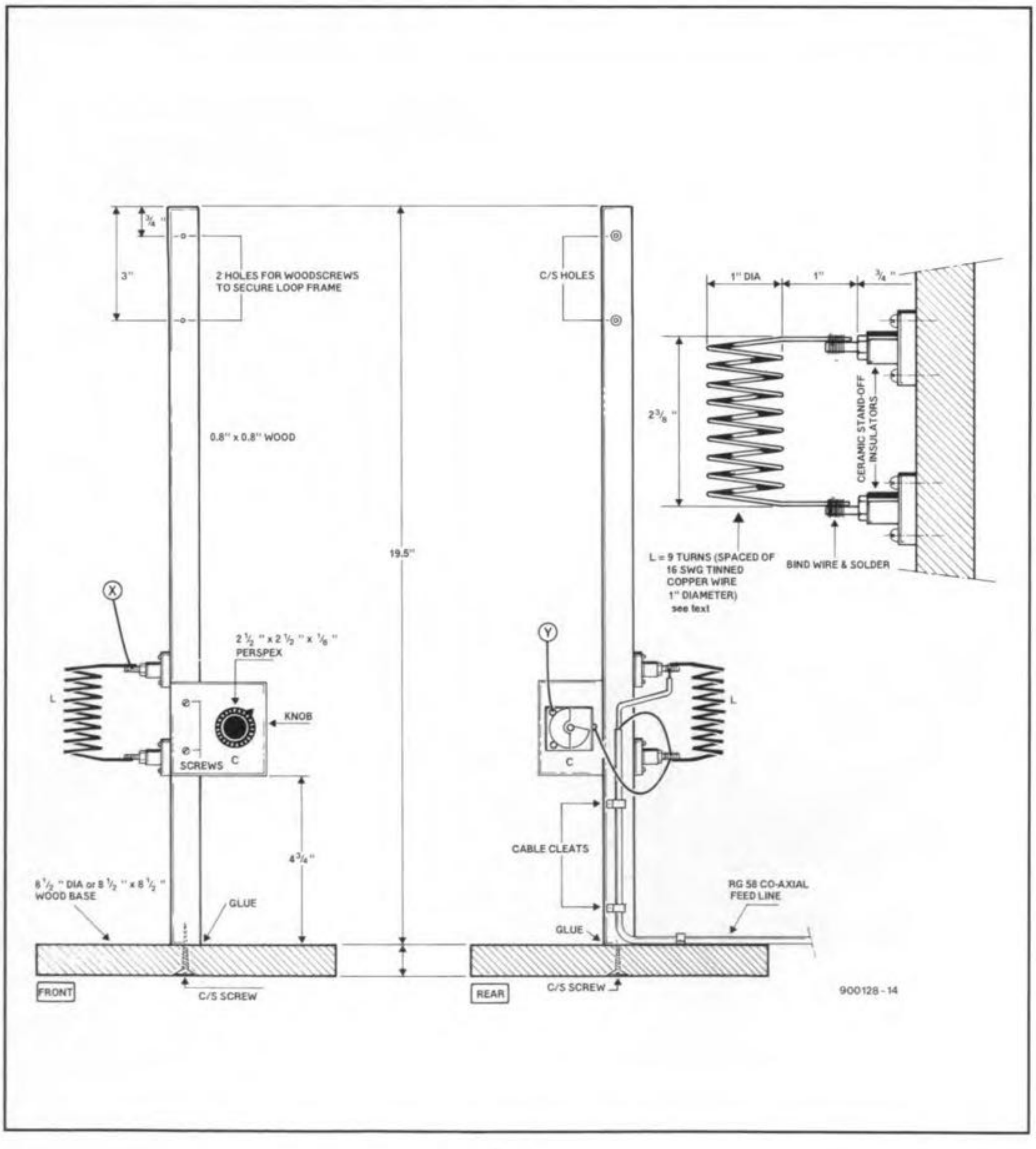

Fig. 6.

two cable cleats as shown in Fig. 6.

Testing and operating

Connect the coaxial feedline of the loop to the antenna socket of a receiver that is tuned to 3500 kHz. Turn the tuning capacitor *C* for maximum signal, which should be obtained with the rotor enmeshed about 40%.

Select a continuously transmitting station near 3500 kHz, retune *C* and rotate the loop slowly, noting the peaks and nulls that occur: these should produce the 'fish-like' polar diagram noted earlier.

The polar diagram test may also be carried with the use of a signal generator, covering the range 2700–4500 kHz and fitted with a wire probe to radiate across the room.

To test with a transmitter, the loop/receiver combination should be set to 3550 kHz. Tune the transmitter to 3550 kHz into a dummy load. Replace the dummy load with the loop, which should load with not more than a tiny adjustment of *C*. Radiation may be verified with a field-strength meter. If there is any difficulty in fully loading the loop, the inductance of *L* may be altered slightly by sqeezing together, or opening out, its turns until optimum impedance matching is obtained. If difficulties still occur, recheck the loop wiring and ensure that the outer wire tail of the loop goes to *L* and the inner to the stator of *C*.

The tests should be repeated at 3750 kHz to verify that the loop performs satisfactorily over the 3500–3800 kHz band.

If measured, the SWR should not exceed 1.5:1 at the selected frequency. The loop should operate within ±20 kHz of that frequency without the need of retuning it.

On-the-air tests may now begin.

WARNING. In the interests of safety, the loop should be used indoors only with LOW POWER, that is, not exceeding 15 watts. At 20 watts or more, the tuning capacitor *C* will flash over and this can be remedied only by the use of a larger, wider-spaced variable capacitor. The peak RF voltage exists at the stator of the capacitor.

Use on other frequency bands

160 m amateur band (1800–2000 kHz)

Replace the tuning capacitor by a 100 pF model of the same type. The loop will then cover both the 3500–3800 kHz and the 1800–2000 kHz bands, but a slow motion drive is probably required on the capacitor.

A larger impedance matching coil will be required and this will be found by experiment. For two-band operation, the new larger coil can be used on the 3500–3800 kHz band with the aid of a clip-on shorting link from the 'earthy' end.

40 m amateur band (7000–7300 kHz)

Removal of one inner loop turn should suffice to tune the loop to this band. Impedance matching coil *L* will have to be reduced empirically.

Finally

It is **IMPORTANT** that before undertaking the modifications for the 40 m or 160 m bands, the antenna is made as described for operation in the 80 m band to verify correct operation, to carry out on-the-air tests and to familiarize yourself with its operation.

REMEMBER that the maximum radiated signal, or the maximum received signal, occurs when the forward lobe is pointing to the required station.

In case you have difficulty in obtaining the Jackson Type C809 60-pFcapacitor, try J. Birkett, Maplin or Cirkit. The wire may be obtained from Marco Trading.

Have fun with the 'Miser's T/R Loop': the writer does (using 7 W RF output)! ■

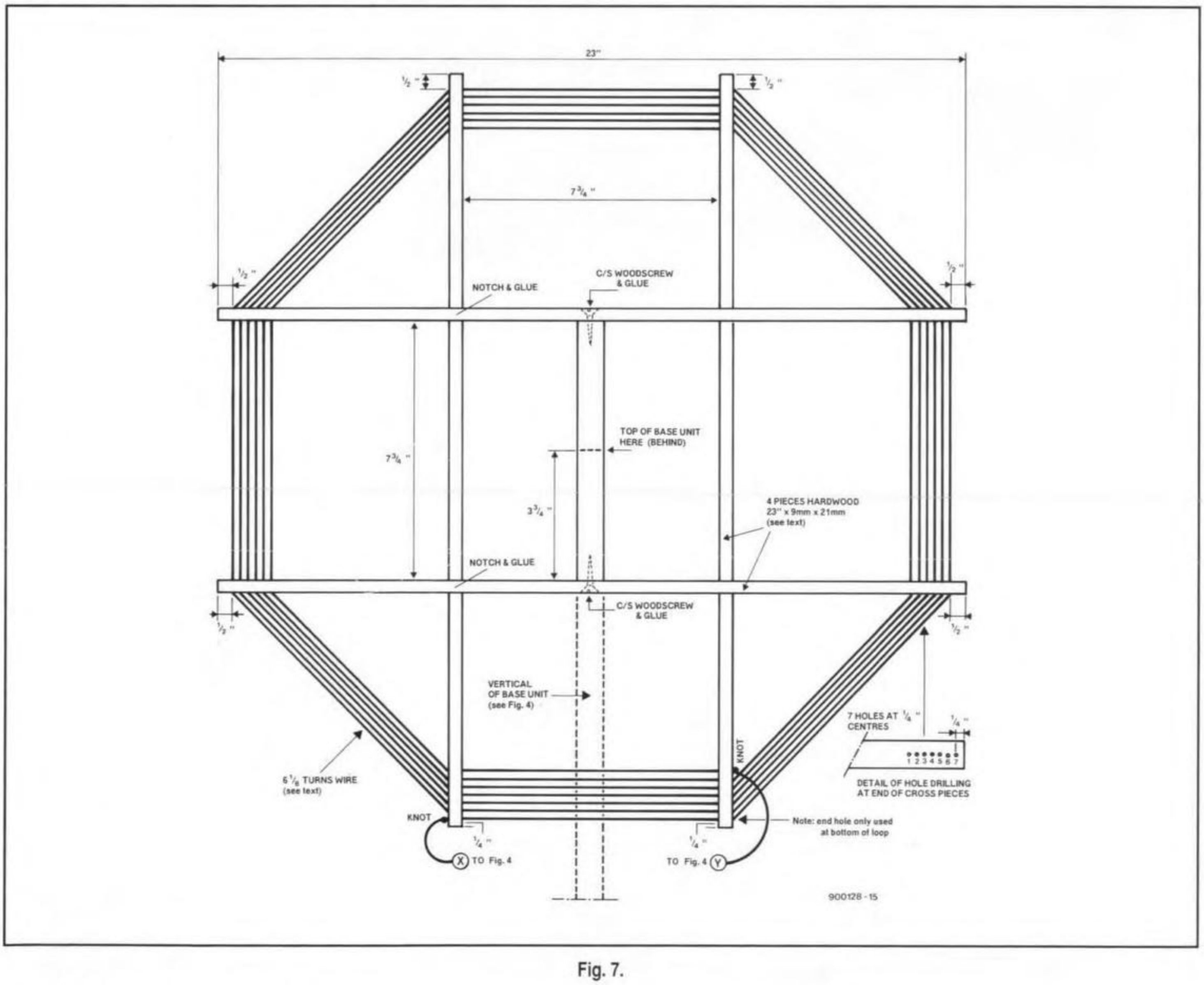

Fig. 7.

PT100 THERMOMETER

Depending on the type of platinum probe used, the thermometer presented here has the unusually large range of –100 °C to +1000 °C. The unit meets the demand for accurate temperature measurement and control in, say, engines, freezers, ovens and heating systems.

J. Ruffell

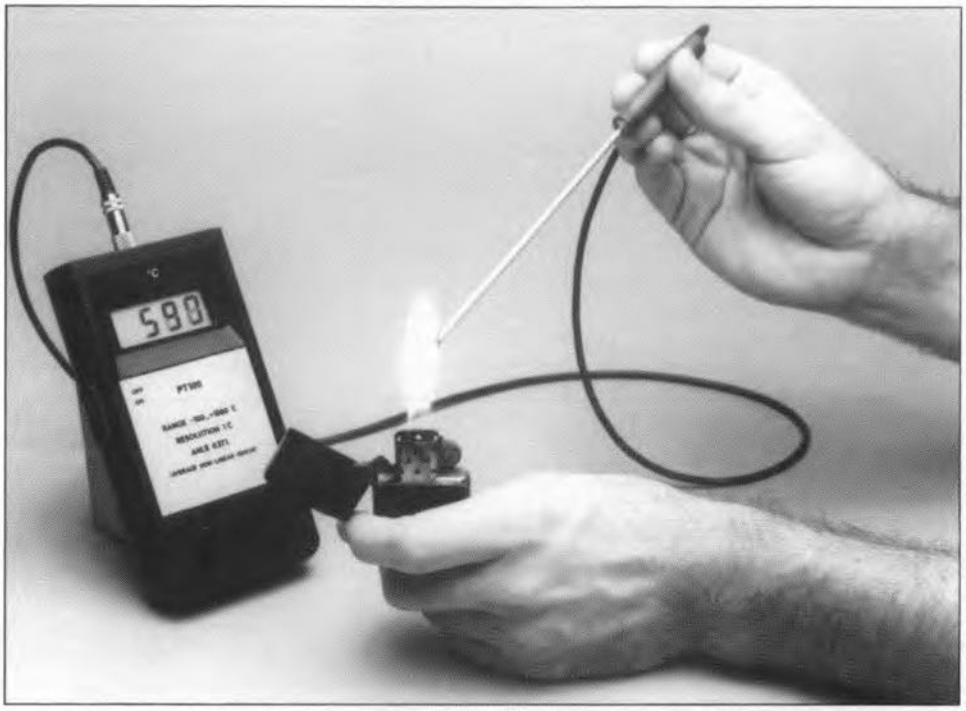

MAIN SPECIFICATIONS

- **Temperature range: –100 °C to +1000 °C**
- **Resolution: ±1 °C**
- **Average non-linear error: 0.367%**
- **Low-battery warning: $U_b < 7.6$ V**
- **Overflow warning: Probe not connected**
- **Power supply: 9-V PP3 battery**
- **Current consumption: 2 mA**
- **Suitable for use with all Pt100 platinum probes**

TEMPERATURE sensors come in many shapes and for many different purposes. An example is the well-known body thermometer, an analogue instrument with a relatively small measurement range and an accuracy of about 0.1 °C. A more playful thermometer is the one found on many desks these days. This type indicates the room temperature by means of coloured areas. Unfortunately, both the body thermometer and the desk-top thermometer are unsuitable for measurement of relatively high or low temperatures, or temperatures that change over a relatively large range. Temperature measurement in a deep-freezer, a boiler or a kitchen oven invariably requires the use of a sensor fitted in a probe, so that the temperature can be read safely, i.e., at some distance from where the 'heat is on'.

The effect of temperature changes plays a role in almost any phenomenon described by physics. In many cases, the factor temperature is one that must be ruled out, or compensated. The present thermometer uses exactly this principle of compensation. In terms of measurement techniques, two types of temperature sensors exist: active and passive.

Active sensors, which include (inexpensive) thermoelements, supply a temperature-dependent voltage. Unfortunately, such elements invariably require a reference element since they can only measure temperature differences. Also, to avoid measurement errors, the wire material must be suitable for the relevant thermoelement. Non-linearity can be quite a problem with these devices, and may amount to no less than 2 °C in the range 0 °C to 100 °C. By virtue of their small size, the wide variety of enclosures, and the ability to work at temperatures up to 1500 °C, thermoelements are used mainly for industrial applications. In these, the problem of non-linearity is usually solved by a computer which corrects the thermoelectric voltages of many hundreds of measurement locations to give an approximation of the true temperature.

The passive way: platinum resistors

Resistance thermometers fall into the category of passive sensors. Their underlying principle is the change in resistance in metals, semiconductors and electrolytes as a function of temperature. The actual changes are specific to the material in question. In the case of metals, the relation between temperature and resistance is virtually linear. The relative change of resistance as a function of temperature is generally called the temperature coefficient, dR/dT. Since this coefficient is also temperature-dependent, an average coefficient, α, is defined for the change between 0 °C and 100 °C. For pure platinum (Pt),

$$\alpha_{Pt} = 3.92 \times 10^{-3} \quad [{}^\circ\mathrm{C}^{-1}]$$

The pure metals have the highest values for α, and have much better characteristics than any alloy, both as regards ageing effects and repeatability of once established coefficient values. A further advantage is that the dependency of resistance on temperature is mathematically simple. In the case of platinum, for instance, the dependency is ex-

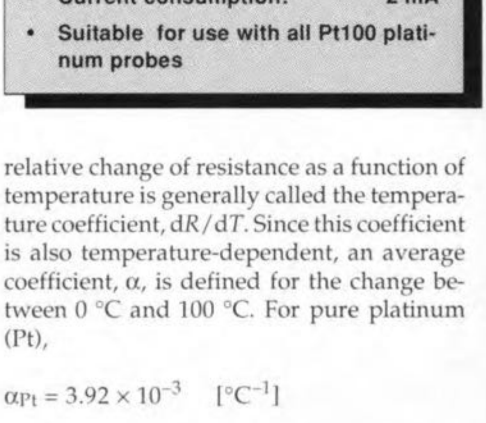

Fig. 1. Pt-100 resistors in various sizes (photograph courtesy Sensycon GmbH).

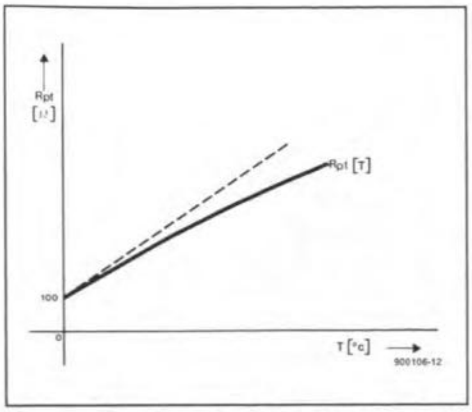

Fig. 2. Non-linearity of the resistance of a Pt-100 sensor as a function of temperature.

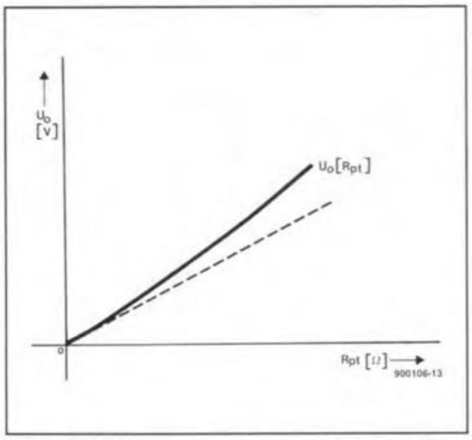

Fig. 3. The input voltage of the read-out must be corrected to achieve a linear response.

pressed by an equation with a single power of two. In practice, platinum resistors inevitably contain small impurities which lower the value of α.

In most cases, the platinum resistor consists of a strip of platinum wound on a carrier. To prevent leakage currents in the resistor, the winding is either covered by an enamel or a glass-silk coating (for low-temperature applications), or moulded into glass or a ceramic substance (for temperatures up to 850 °C). The latter type of resistor is usually protected against physical or chemical influences by a metal tube. It should be noted that the actual size and shape of the resistor may cause large measurement errors. When, for instance, the resistor is immersed half-way into melting ice, while the other half is in air of 25 °C, the measured temperature will be about 10 °C. This type of bad measurement practice is illustrated in the introductory photograph: the measuring resistor in the probe is not entirely in thermal contact with the flame that heats it. The result is that the measured temperature is much lower than the actual temperature. Also, the measuring resistor in the metal cover may be damaged because of the high flame temperature.

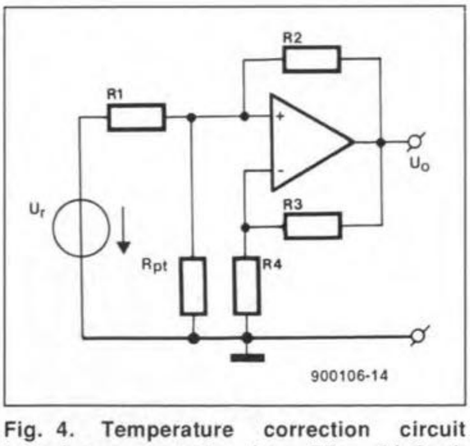

Fig. 4. Temperature correction circuit based on an operational amplifier with feedback. The linearizing function is determined by resistors R1 to R4.

Resistors composed of small ceramic carriers with platinum layers have been in production at several manufacturers for quite some time now. Like thermoelements, these resistors allow multi-point temperature measurement systems to be set up, with a possibility to eliminate errors caused by unfavourable positioning.

The main problem for the manufacturers of these devices is, however, to ensure a consistent value of α, for which most national standards institutions have set up a requirement of $\alpha = 0.98\ \alpha_{Pt}$.

Industrial requirements

Repeatability in the use of platinum resistors, and the ability to compare results obtained with different (industrial) thermometers have created a need to define standard tolerances and measurement conditions. The DIN IEC751 specification defines an average temperature coefficient, α, of 3.85×10^{-3}. A set of equations has been developed for platinum resistors (Pt100) which have a resistance of 100.00 Ω at 0 °C. These equations allow standard value tables to be set up. For the Pt100 material, the resistance, $R_{(t)}$, in the temperature range from –200 °C to 0 °C is described by

$$R_{(t)} = R_0 \{ 1 + At - Bt^2 - C\,(t - 100\ ^\circ\mathrm{C})\, t^3 \}$$

while in the temperature range from 0 °C to 850 °C the equation is simplified to

$$R_{(t)} = R_0\,(1 + At - Bt^2) \qquad [1]$$

in these equations,

$R_0 = 100.00\ \Omega$

$A = 3.90802 \times 10^{-3}\ ^\circ\mathrm{C}^{-1}$

$B = 5.80195 \times 10^{-7}\ ^\circ\mathrm{C}^{-2}$

$C = 4.2735 \times 10^{-12}\ ^\circ\mathrm{C}^{-4}$

The tables set up on the basis of equation [1] enable a temperature value to be found with each measured resistance.

It should be noted that there are also (much more expensive) resistors specified at 500 Ω or 1000 Ω at 0 °C (Pt500 and Pt1000 respectively). It will be clear that these types require their own look-up table to be set up.

According to the DIN IEC751 specification, platinum resistors are divided into four tolerance classes, A, B, C and D. The tolerance on class-A devices is defined as

$$^\circ C_A = \pm\,(0.15 + 0.002\ |t|\ )$$

and that on class-B devices as

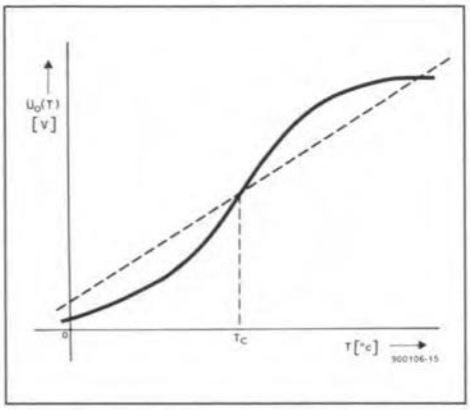

Fig. 5. The temperature deviation of a Pt-100 probe may be corrected by setting a cross-over point, T_c, at a suitable temperature. Note that in this drawing the deviation from the temperature line is not to scale.

$$^\circ C_B = \pm\,(0.30 + 0.005\ |t|\ )$$

In practical terms, this means that a temperature difference as high as 2.5 °C is permissible when two class-B resistors are used at at about 200 °C.

A further source of errors is formed by the heating of the resistor as a result of the auxiliary energy. To keep these errors in check, DIN IEC751 specifies a maximum measurement current of 10 mA at 100 Ω.

Electronic compensation

The Pt100 thermometer consists of a resistance-to-voltage (*R-U*) converter and an LCD driver. The two functions are elegantly combined in the Type ICL7106 from GE-Intersil. When this IC is used as a read-out for the temperature range from 0 °C to 100 °C, a simple regulated current source is adequate for the *R-U* converter. In this range, α is virtually constant, i.e., the relation between resistance and temperature is virtually linear. At a temperature of a couple of hundred degrees celsius, however, the non-linearity becomes significant (see Fig. 2). The idea of linearization by means of a computer is dismissed because the original aim was a portable instrument.

Fortunately, compensation with the use of an analogue circuit is inexpensive and simple to implement. The curve in Fig. 2 shows that the sensitivity (rate of rise) of the Pt100 sensor drops with increasing temperature. The function of the compensation circuit is, therefore, to raise the output quantity (i.e., voltage) non-proportionally in relation to the input quantity (i.e., resistance). If this works, the result is a compensation of the resistance deviation (see Fig. 3), as expressed by

$$U_{o(R_t)} = R_t\, U_r\ /\,(D + R_t\, E) \qquad [2]$$

where R_t is the Pt100 resistance at a certain temperature, and U_r is the reference voltage (auxiliary energy). Note, however, that equation [2] is only valid when

$U_r > 0$, $D > 0$, and $E < 0$

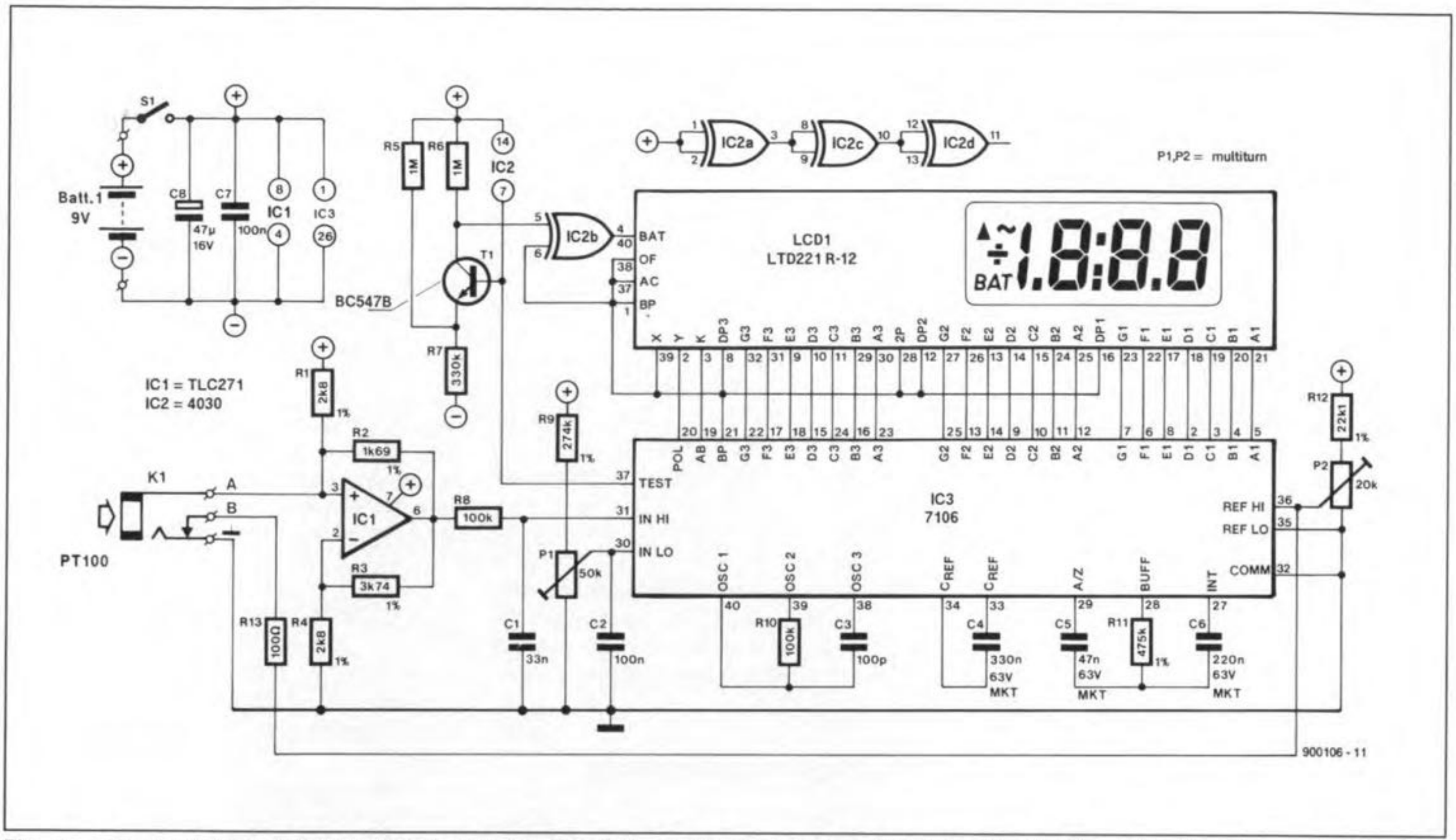

Fig. 6. Circuit diagram of the Pt-100 thermometer. The components around opamp IC1 determine the linearizing function required to allow the unit to operate over a wide temperature range.

replacing R_t in equation [2] by [1] and rearranging

$$U_{0(Rt)} = U_{0(T)} = \frac{U_r}{D \,/\, [\, R_0\,(1 + At - Bt^2)\,] + E}$$

such a function may be implemented by an amplifier of the type shown in Fig. 4. The constants D and E are defined as

$$D = R_1 \,/\, (\,1 + R_3/R_4\,)$$
$$E = (\,R_2 - R_1\,R_3/R_4\,) \,/\, [\,R_2\,(\,1 + R_3/R_4\,)\,]$$

Unfortunately, it is not easy to adjust the variables, i.e., resistors R1-R4 and the reference, U_r, to achieve optimum linearization of $U_{o(T)}$, and this is where the computer does come in. As illustrated in Fig. 5, the requirement for $U_{o(T)}$ is to have a cross-over point at temperature T_c. The computer can help to find resistor and reference values that result in the smallest possible deviations from the ideal compensation curve. Assuming that resistors from the E96 series are to be used,

R1 = 2800 Ω
R2 = 1690 Ω
R3 = 3740 Ω
R4 = 2800 Ω
U_r = 2.8 V

These values result in a cross-over temperature, T_c, of 383.5 °C, and ensure a (theoretical) maximum error of 0.6%, or an average error of 0.37%, over the range of −100 °C to +1000 °C. The rate of rise of the output voltage produced by the linearizing circuit is 1 mV per degree Celsius.

Practical circuit

The circuit diagram of the Pt100 thermometer (Fig. 6) has few surprises as it is mainly an application circuit of the well-known ICL7106 LC display driver. The reference voltage is supplied by the 7106, whose COMM terminal (pin 32) is at a fixed potential of 2.8 V below the supply voltage. However, since COMM acts as a ground point, the reference voltage is obtained via resistor R1.

The output voltage of the linearizing circuit is passed through a low-pass filter, R8-C1, before it arrives at the IN-HI input of the 7106. The filter suppresses noise picked up by the wires between the read-out and the Pt100 probe. The off-set voltage at the IN-LO input is adjusted with preset P1 until it is equal to the output voltage of IC1 when the probe is at a temperature of 0 °C. The typical level required to null the display is 0.24 V.

The second preset, P2, determines the linearity factor, which is adjusted at a temperature of 100 °C. When the Pt100 sensor is disconnected from the input socket, K1, the wiper of P2 is taken to ground via R3. The resulting input voltage causes the 7106 to actuate the overflow symbol on the display. The LO-BAT (low battery) symbol is actuated when the battery voltage drops below 7.6 V. This is detected by transistor T1 and gate IC2B. The other components around the 7106 form part of the standard application circuit, and merit no further comment.

Construction

Little needs to be said about the construction of the digital read-out. The printed-circuit board shown in Fig. 7 makes life easy even for those with relatively little experience in building electronic circuits. Start the construction with the wire links on the board. Next, mount the resistors, the capacitors and the IC sockets. The transistor, the 7106 and the LC display are fitted last. The wires between the jack socket and the printed-circuit board must be relatively thick, and remain as short as possible. On completion of the cir-

Pt100 SENSORS FROM MURATA

A range of thin-film platinum-100 (Pt100) resistors complying with the DIN IEC751 specification, classes A, B, C or D, is available from Murata Mfg. Co. Ltd. Other resistor values are 500 Ω and 1000 Ω in various sizes. An information leaflet covering the background theory, DIN IEC751 specifications, and product classification is available from Murata. This leaflet also contains the resistance look-up and conversion tables mentioned in this article.

Murata Electronics (UK) Ltd. • 5 Armstrong Mall • Southwood • FARNBOROUGH GU14 0NR. Telephone: (0252) 523232. Fax: (0252) 511528.

Murata Erie North America Inc. • 2200 Lake Park Drive • Smyrna • Georgia 30080-7604. Telephone: 404-436-1300.

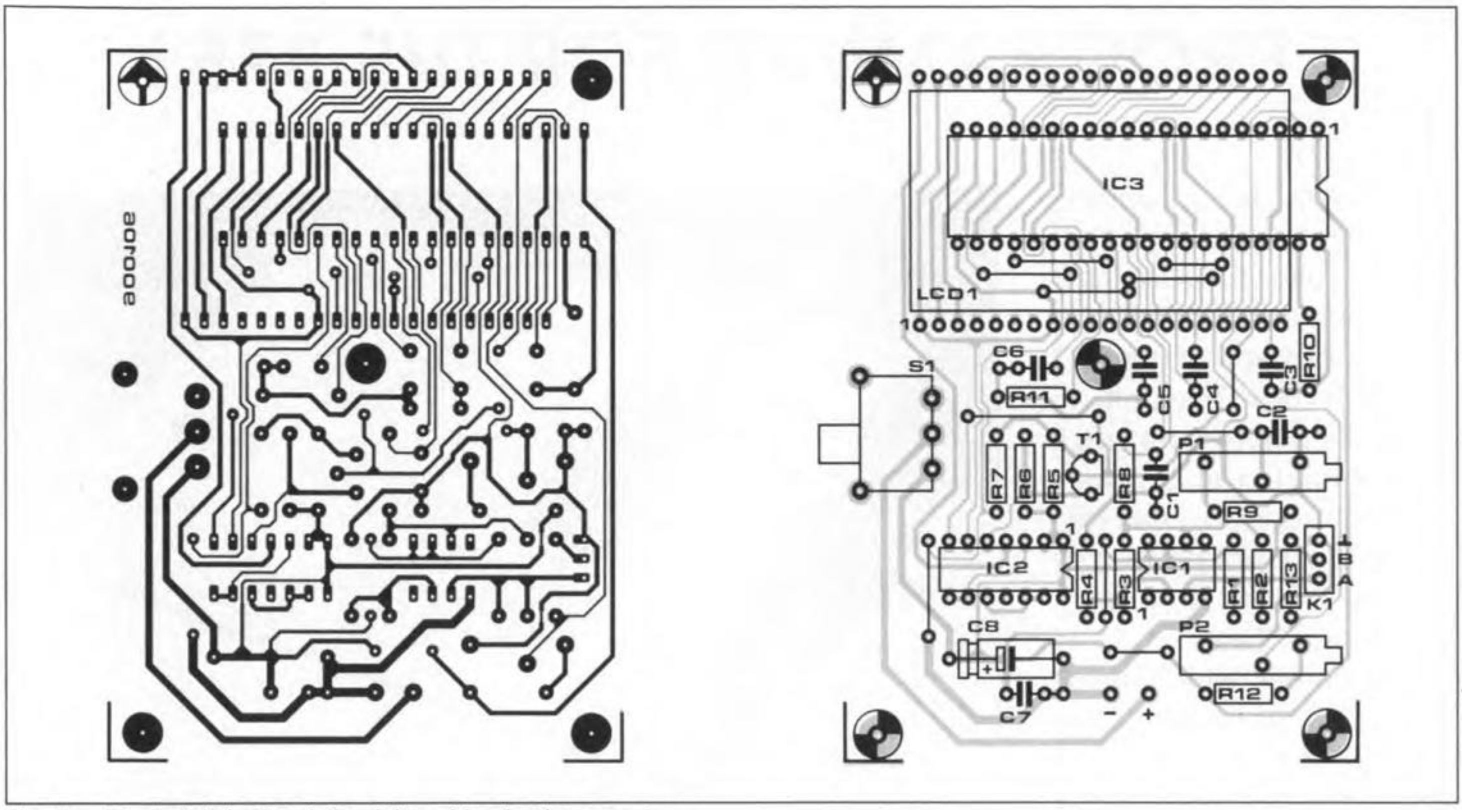

Fig. 7. Single-sided printed-circuit board for the thermometer.

COMPONENTS LIST

Resistors:

2	2kΩ8 1%	R1;R4
1	1kΩ69 1%	R2
1	3kΩ74 1%	R3
2	1MΩ	R5;R6
1	330kΩ	R7
2	100kΩ	R8;R10
1	274kΩ 1%	R9
1	475kΩ 1%	R11
1	22kΩ1 1%	R12
1	100Ω	R13
1	50kΩ multiturn preset	P1
1	20kΩ multiturn preset	P2

Capacitors:

1	33nF	C1
2	100nF	C2;C7
1	100pF	C3
1	330nF 63V MKT	C4
1	47nF 63V MKT	C5
1	220nF 63V MKT	C6
1	47µF 16V	C8

Semiconductors:

1	BC547B	T1
1	TLC271	IC1
1	4030	IC2
1	7106	IC3

Miscellaneous:

1	3½-digit LCD, e.g., Philips Components LTD221R-12	LCD1
1	3.5-mm jack socket with switch	K1
1	on/off slide switch for PCB mounting	S1
1	Pt100 probe, e.g., GFT2060 (−200 °C to +600 °C)	
1	9-V PP3-size battery	
1	hand-held ABS enclosure with display window	
1	printed-circuit board	900106

cuit board, fit it into a hand-held ABS enclosure, for which a suggested front-panel layout is shown in Fig. 8.

Kitchen-table adjustment

As already mentioned, the instrument is nulled with preset P1. Fill a plastic beaker with about 0.5 l water and a handful of ice-cubes from the refrigerator. Stir the mixture until half the ice has melted. Immerse the Pt100 sensor in the icewater, wait half a minute, and adjust P1 until the display reads 0 °C.

Next comes preset P2, which is to be calibrated at 100 °C. This is the temperature of pure, boiling water at an air pressure of 1013 mbar. When rain water or distilled water is used, the change of the boiling point caused by impurities is negligible for our purpose. The air pressure, however, at which the water boils is of great importance. The dependence of the boiling temperature, t_p, on the air pressure, p, may be written as

$$t_p = 100 + 0.0277\,(p - 1013) \quad [°\mathrm{C}]$$

where p is in millibar, mb). To find out about your local air pressure, consult a weather bureau, listen to navigation services (airports), or contact an amateur meteorologist. Note that the official air pressure is usually the value measured at sea level. To correct this value for your location, deduct 1 mb from the official pressure for every 8 m of altitude above sea level. For example, if you live at 80 m above the sea level, the air pressure is 80 mb lower than that stated by the weather bureau.

The actual calibration of the read-out is simple: immerse the Pt100 sensor in boiling water, and adjust P2 until the display shows the calculated temperature.

Temperature range

The thermometer is capable of measuring temperatures between −100 °C and +1000 °C provided a suitable Pt100 probe is used. Whatever probe you use, be sure to observe the manufacturer's specifications as regards the temperature range. In most cases, the maximum temperature at which the probe may be used is determined by the construction and the difference between the coefficients of expansion of glass and platinum wire. The Type GFT2060 probe, for instance, has a temperature range of −200 °C to +600 °C. When connected to the Pt100 thermometer described here, it may be used for reliable temperature measurement in the range between −100 °C and +600 °C. ■

SOFTWARE SERVICE

Readers who intend to use the thermometer for measurement over a relatively small range may like to know that a program is available to calculate the values of R1 – R4 for the best possible linearity, and, consequently, higher accuracy. This program is available on request through our Readers Services as order no. ESS1481. The diskette format is DOS 360 K.

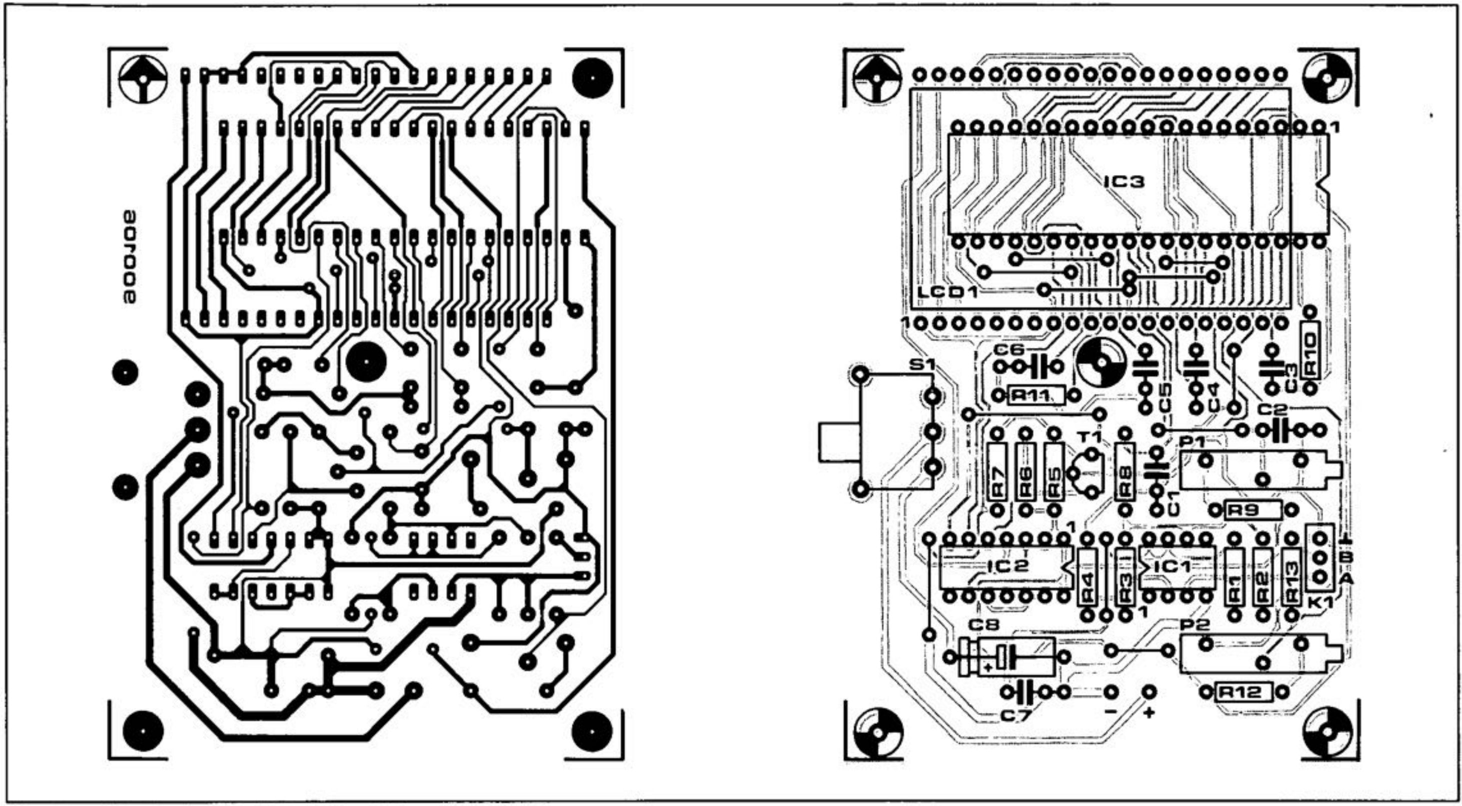

Fig. 7. Single-sided printed-circuit board for the thermometer.

PROGRAMMER FOR THE 8751

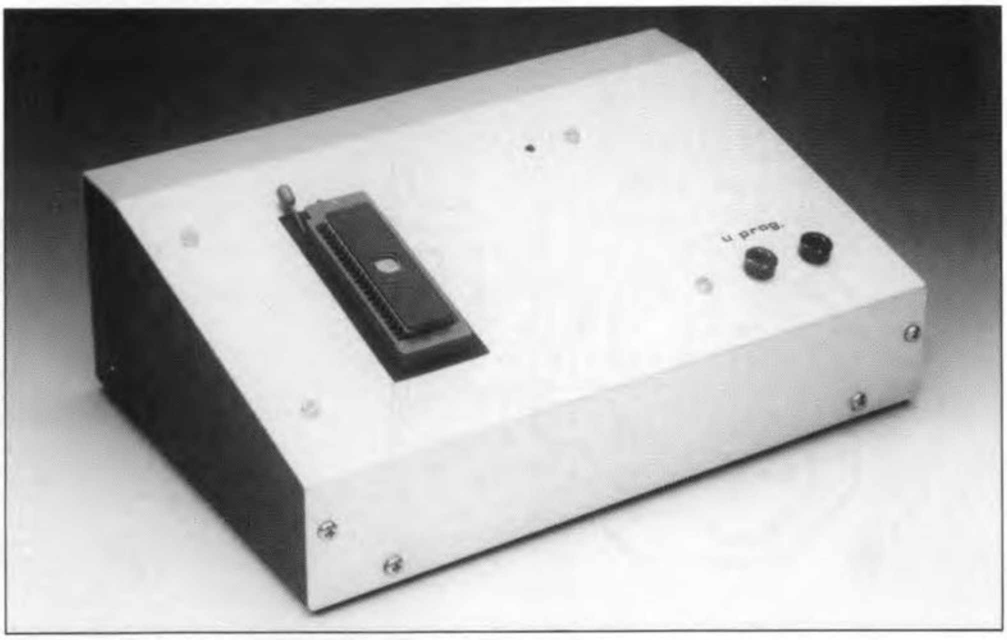

Intel's 8751 is a powerful 8-bit microcontroller with an on-board EPROM that provides a fairly secure way of protecting the internal code. The unit described here puts you in a position to run a blank check on a 8751, read its contents (if not protected) and, of course, program the device. The programmer, which uses an 8751H for its own 'intelligence', is an extremely simple circuit which works in conjunction with an IBM PC or compatible sporting an RS232 outlet. Comprehensive support software, including assembler and download utilities, are supplied on a disk for this project.

O. Bailleux

FAITHFUL readers of this magazine may remember our using the 8751 in two projects described in earlier issues, namely a microcontroller-driven power supply (Ref. 1) and an autonomous I/O controller (Ref. 2).

Every programmer for a microcontroller—or, for that matter, for any EPROM, PROM, PAL, EEPROM or GAL—consists basically of two parts: (1) a power supply to provide the supply voltage for the control circuit, and the programming voltage, and (2) a control circuit, which is usually an I/O interface that allows an external computer to set the data and addresses for the chip to be programmed, to supply the necessary timing and control signals, and to read data from the memory section of the component to be programmed.

The present programmer is connected to an RS232 port of an IBM PC or compatible. The actual connection consists of three or five wires, which can be several metres long.

System timing and addressing

Before describing the circuit of the programmer, it is useful to discuss the basic signal timing relevant to the 8751H that controls the functions of the unit. Mind you, we are talking about the microcontroller that is permanently present in the circuit, i.e., not the device to be programmed.

To begin with, the 8751H checks the RS232 communication with the PC. The protocol is simple: as shown in Table 1, commands issued by the PC consist of one byte, which may be followed by a number of parameters. Some commands expect the programmer to return one or more bytes. An example:

- to read the byte at address 0 in the EPROM in the 8751, the PC sends command 03, followed by operands 00 and 00, which form the 16-bit address code. The programmer responds to this command by returning the byte at address 0000.
- The timing of the data flow between the PC and the programmer is illustrated in the diagrams in Figs. 1 (program operation) and 2 (read operation).
- A test command allows us to check that the programmer is operational. In response to this command, the programmer returns two bytes to the PC.

The above description of the commands is not complete, and serves merely to illustrate the way in which the programmer is controlled via a terminal, i.e., a PC running the program developed by the author. Full information on the communication between the two units is provided in the

Command	Operation	Returned value
01 X Y	test connection	Y X
02 X Y Z	write byte Z at address Y + (256 X)	none
03 X Y	read byte Z at address Y + (256 X)	Z
04	switch 5-V supply on	none
05	switch 5-V supply off	none
06	switch programming voltage on	none
07	switch programming voltage off	none
08	initialisation	none

Table 1. The command set for the programmer: simple and effective.

README.DOC file on the diskette available for this project.

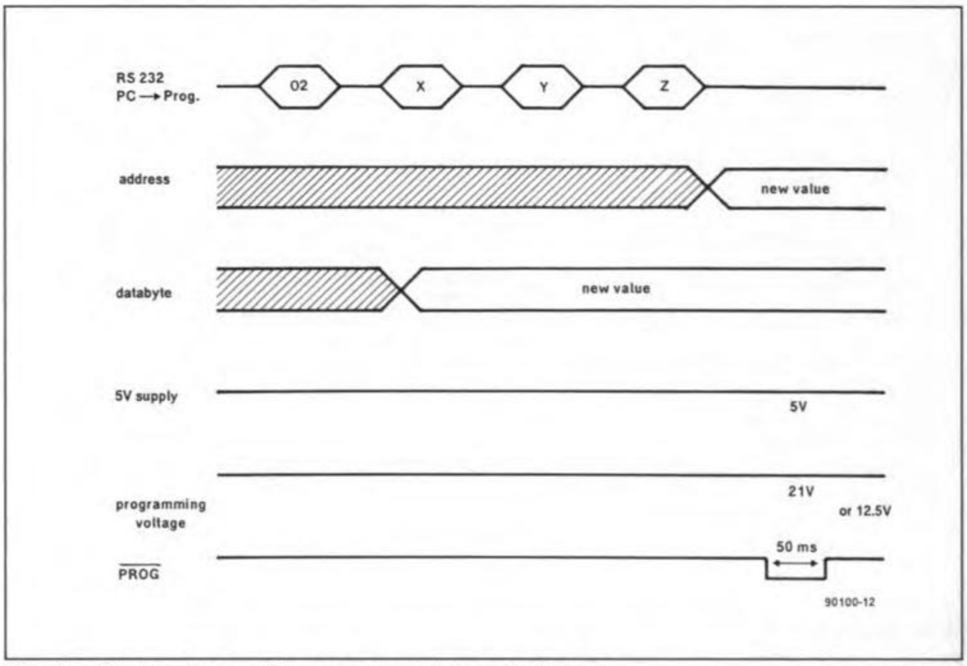

Fig. 1. Timing diagram for a programming operation.

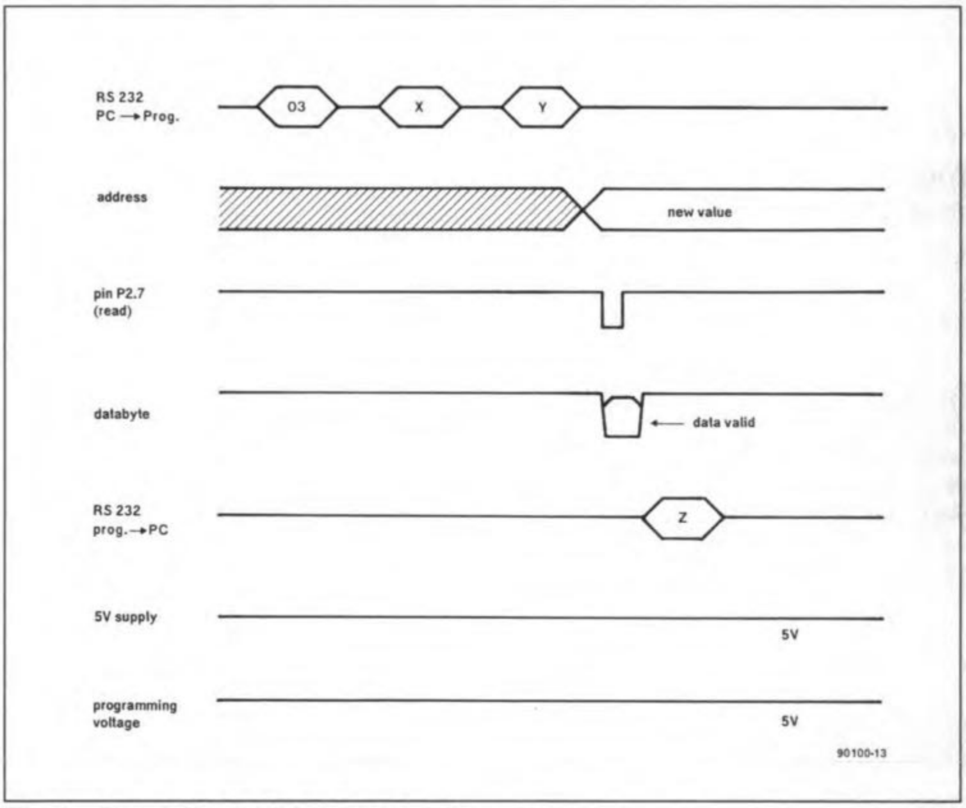

Fig. 2. Timing diagram for a read operation.

The hardware

A glance at the circuit diagram in Fig. 3 illustrates to what extent a microcontroller can reduce the component count in a programming circuit. The 8751 to be read or programmed, IC4, is plugged into a zero-insertion force (ZIF) socket.

The circuit may be divided into four parts: the power supply, the host microcontroller, the I/O interface, and the microcontroller to be programmed. Each of these parts will be discussed separately below.

Power supply

This has few surprises. Transformer Tr1 has two separate 9-V secondary windings. The one connected to K2 powers a conventional 5-V supply based on a 7805 voltage regulator. The other powers a symmetrical ±12-V supply with two zener diodes, D11 and D12, as the regulating elements. The symmetrical supply is required for the operational amplifier in the I/O interface circuit.

8751 in ZIF socket

The 8751 drawn in position IC4 is the chip to be programmed or read. The other 8751, IC1, is the internal controller of the programmer. Note that IC4 is connected to a 4-MHz quartz crystal, and IC1 to an 8-MHz crystal. The programming voltage supplied by the circuit around T1 and T2 is applied to the $\overline{\text{EA}}/V_{PP}$ (external access enable/programming voltage) terminal of IC4. This voltage is 21 V, and must not exceed this value on penalty of destroying the 8751 to be programmed. The externally applied programming voltage is switched by the P2.7 line of the host controller, IC1, via transistors T1 and T2. It should be noted that there are also CMOS versions of the 8751, which must be programmed at 12.5 V.

I/O interface

The I/O interface takes the form of an opamp-based RS232 send/receive buffer. The data transmitted via port line P2.0 of the host controller is converted to positive and negative levels by opamp IC2. The transmitted data (TxD) is available at pin 2 of a 5-way DIN socket, K1. Pins 3 and 5 are interconnected to form a zero-modem setup with dummy handshaking between RTS (request to send) and CTS (clear to send). The type of connector and its pinning are identical to those used on the BASIC computer (Ref. 3), so that the same cable may be used to connect the PC's RS232 outlet.

The RS232 signal received from the computer (RxD) is converted to 5-V swing by the circuit around transistor T3. The host controller reads the received commands and data via port line P2.1.

The two-transistor driver and the relay shown to the right of the RxD interface serve to pull four inputs of the 8751 in the ZIF socket to +5 V when the P2.6 line of the host controller goes high. The on/off state of the relay is indicated by a LED, D3.

Host processor

The host processor in this circuit performs quite a few tasks. It has internal EPROM as well as RAM, and handles the serial I/O communication with the PC, the control of its peripherals, and virtually all read/write and program timing of the chip in the ZIF socket. The circuit operates at a clock of 8 MHz, and is reset on power-up by capacitor C3. Pull-up resistors are fitted on all eight lines of port P0.

Although the 8751 has a built-in serial interface, this is not used here because it requires a 11.0592 MHz quartz crystal in the clock oscillator. Here, two port lines are used in combination with a few lines of program code to allow a less expensive and more widely available quartz crystal of 8 MHz to be used.

Software

When we talk about the software for this project we mean two different things: first, the control program that runs in the host controller, IC1, and, second, the set of user programs that runs on the PC. The first is 'invisible' as it comes in a ready-programmed 8751, the second is supplied on diskette. To assist those who want to try their hand at customizing the programmer, and, of course, at developing programs for the 8751, the author has included a number of utilities and source list-

SOFTWARE SERVICE

This project is supported by two items in the Elektor Software Service (ESS) range:

- a diskette, order number 1471 (MS-DOS format, 5¼-inch, 360 k);
- a ready-programmed 8751, order number 7061.

For prices and details on ordering, please refer to the Readers Services page elsewhere in this issue.

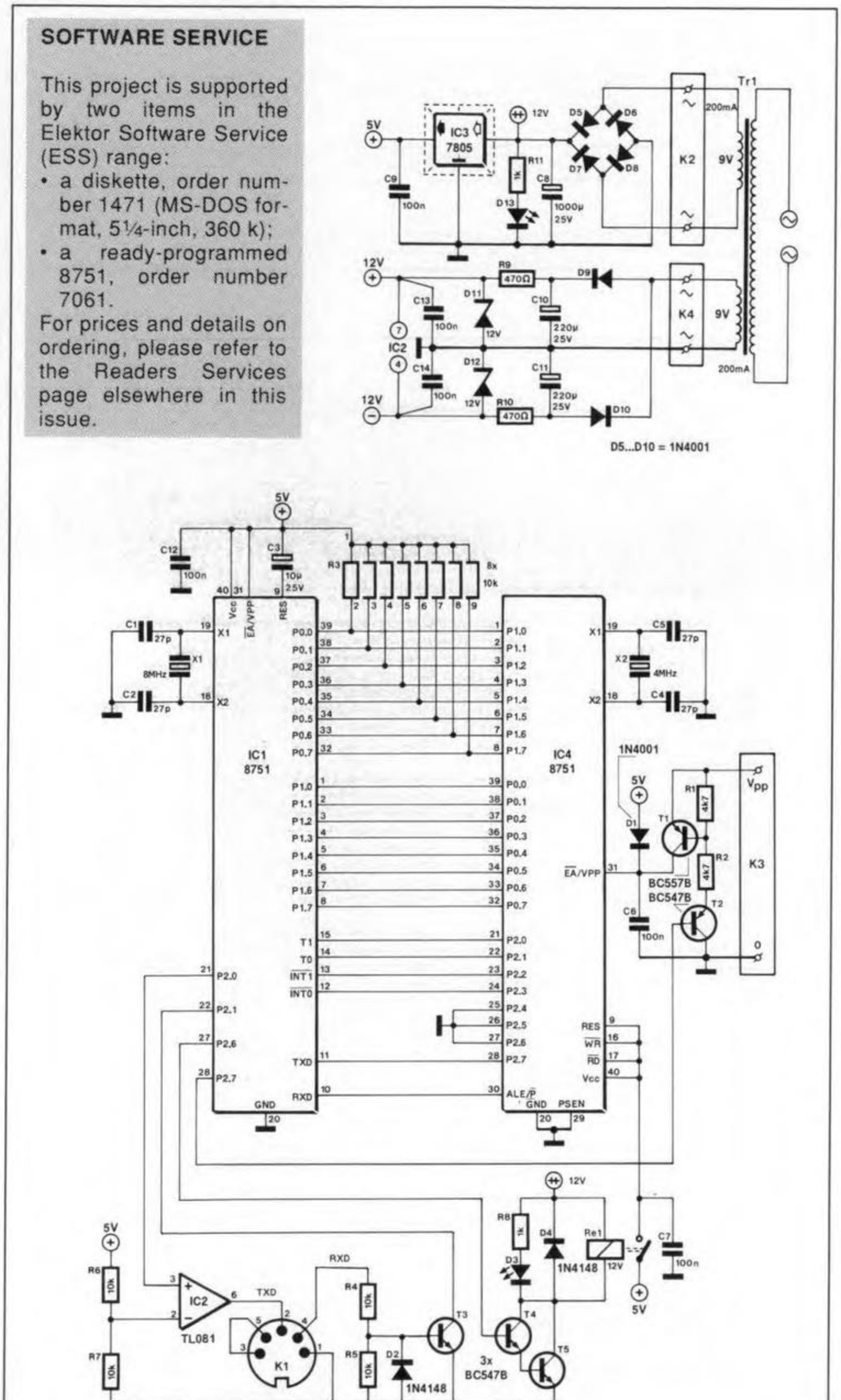

Fig. 3. Circuit diagram of the programmer. Note that the programming voltage must be provided by an external supply.

COMPONENTS LIST

Resistors:

2	4kΩ7	R1;R2
1	8-way 10kΩ SIL	R3
4	10kΩ	R4 – R7
2	1kΩ	R8;R11
2	470Ω	R9;R10

Capacitors:

4	27pF	C1;C2;C4;C5
1	10µF 25V	C3
6	100nF	C6;C7;C9;C12; C13;C14
1	1000µF 25V	C8
2	220µF 25V	C10;C11

Semiconductors:

7	1N4001	D1;D5 – D10
2	1N4148	D2;D4
2	LED 3-mm	D3;D13
2	12V 1W zener diode	D11;D12
1	BC557B	T1
4	BC547B	T1 – T5
1	programmed 8751H	IC1
1	TL082	IC2
1	7805	IC3

Miscellaneous:

1	40-way ZIF socket	IC4
1	8-MHz quartz crystal	X1
1	4-MHz quartz crystal	X2
1	5-way PCB mount DIN socket	K1
1	12-V DIL relay, e.g., Siemens V23127-A0002-A101	Re1
1	mains transformer 2×9V @ 200 mA	Tr1
3	2-way PCB terminal block	K2 – K4
1	heat-sink for IC3	
1	printed-circuit board	900100

ings on the diskette. The program for the PC, PROG.EXE, runs on all XT/AT IBM machines and compatibles fitted with a Hercules, EGA, VGA or CGA video card. PROG.EXE may be started either direct from the DOS prompt, or via the menu in the control program, EV51. This presents the following options in a menu:

- **program** an 8751 with the content of a binary file, which is preferably produced by an 8751 assembler program. The source code must be written starting at address 0, corresponding to the first command execution address of the 8751.
- **blank check** of an 8751
- **read** the content of an 8751, starting at a user-defined address. Read operations are not possible on chips in which the security bit has been set to protect the internal code.

Simply press the arrow keys to select the desired option, or the ESC key to leave the program. Incidentally, the only way to reset the security bit is to erase the EPROM.

The files on the diskette supplied for this project fall into three groups:

- **source** for assembler file manipulation;
- **assembler** for converting source code into object code;
- **programming** for loading an 8751 with a block of object code.

The data speed and protocol between the PC and the programmer are set to 2400 bits/s, 8 data bits, 1 stop bit, and no parity.

Check to make sure…

A few important notes must be made at this point. First, make sure you know the programming voltage of the 8751, and apply either 12.5 V (CMOS devices) or 21 V as required.

Before inserting an 8751, test the programmer by running a blank test on the empty ZIF socket. The 5-V supply LED must light during the read operation. All bytes returned to the PC must read FF. Next, run a programming test on the empty socket, and use an oscilloscope to check the timing and

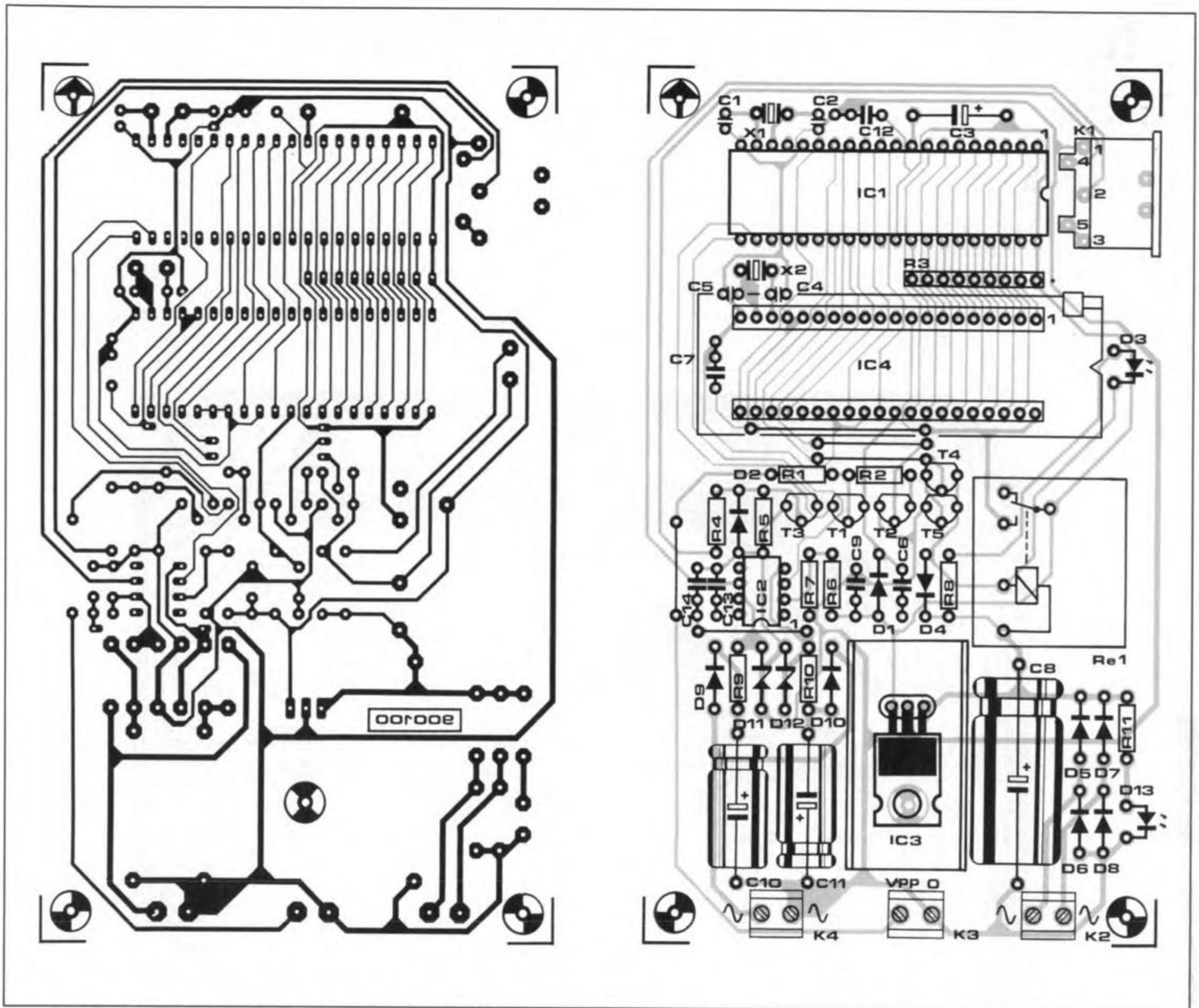

Fig. 4. Track layout and component mounting plan of the single-sided printed-circuit board. Fit a 40-way ZIF socket in position IC4.

the waveforms shown in Figs. 1 and 2. Measure direct at the relevant ZIF socket pins.

Never insert an 8751 into the ZIF socket when the programmer is switched off, or when the PC presents the "Programmer not operational" message following a blank test.

Construction

The construction of the programmer will present few problems when the ready-made printed-circuit board shown in Fig. 4 is used. Fortunately, the board could be designed single-sided by virtue of the low component count, which, in turn, is the result of the use of an 8751 as the central controller.

Fit the ZIF socket and the LEDs at a height that allows them to protrude from the top or the front panel of your enclosure. Make sure you do not swap the two quartz crystals. If difficult to obtain, resistor network R3 may be replaced with eight discrete resistors, which are mounted vertically, and joined at the top side by a wire that takes them to +5 V.

Finally, make sure you use an 8751H, not an 8751AH(P) which has a number of different specifications and does not work in this circuit.

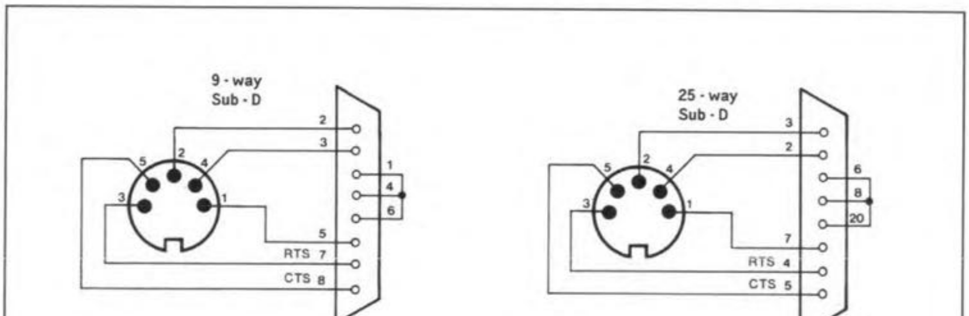

Fig. 5. RS232 connections for 25-way and 9-way sub-D connectors on PCs.

The connection between the PC and the programmer is illustrated in Fig. 5 for PCs with a 25-way D connector (left-hand schematic) or a 9-pin AT-style connector (right-hand schematic). Note the interconnections between the DCD (data carrier detect), DTR (data terminal ready) and DSR (data set ready) lines. If you insist on using a three-wire connection between the PC and the programmer, interconnect the RTS and CTS pins at the side of the PC connector. ■

References:

1. "Microcontroller-driven power supply". *Elektor Electronics* May 1988, June 1988, September 1988.
2. "Autonomous I/O controller". *Elektor Electronics* December 1988.
3. "BASIC computer". *Elektor Electronics* November 1987.

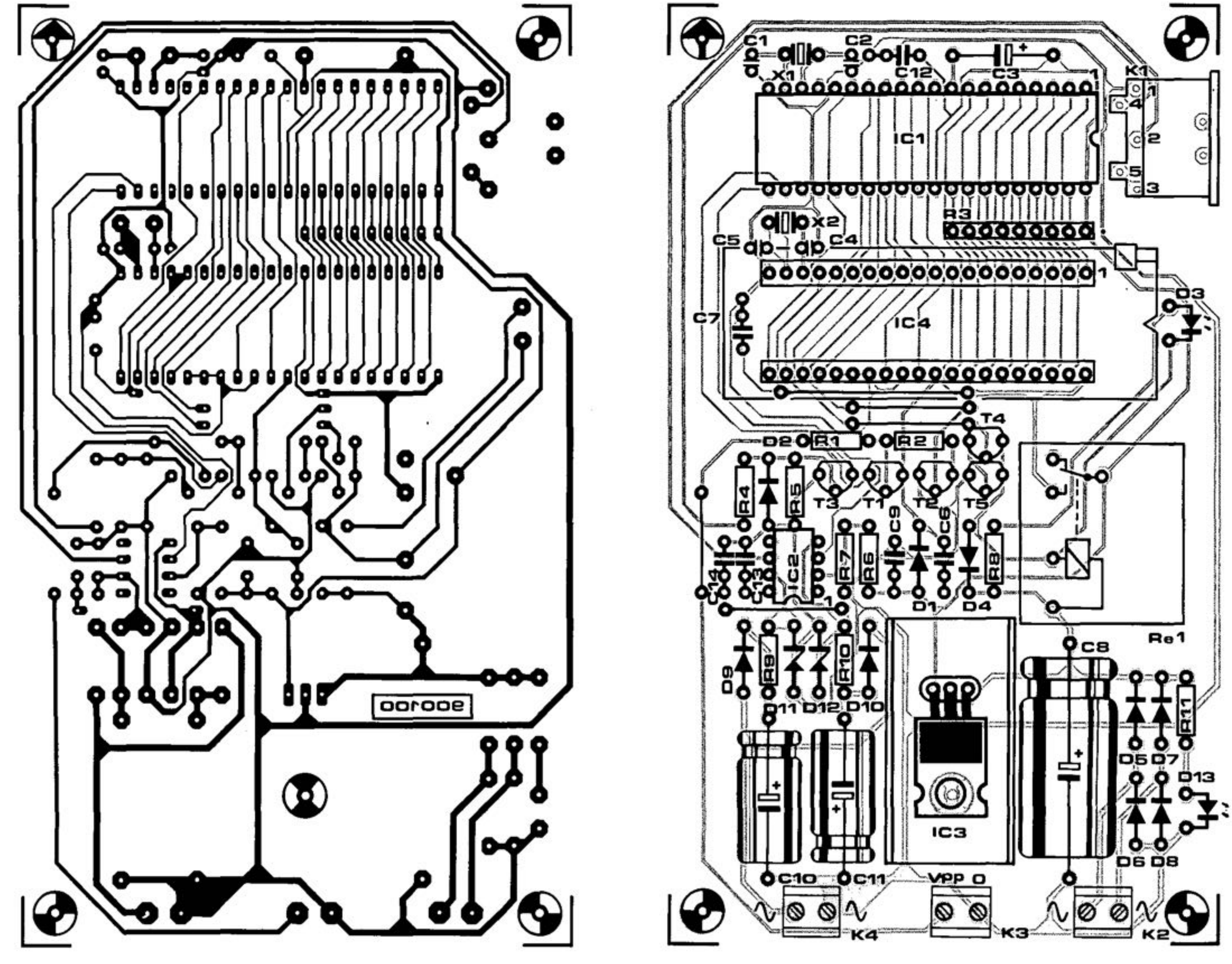

Fig. 4. Track layout and component mounting plan of the single-sided printed-circuit board. Fit a 40-way ZIF socket in position IC4.

CTIONS CORRECTIONS CORRE

400-watt laboratory power supply

October 1989 and November 1990

A number of constructors of this popular project have brought the following problems to our attention.

1. The onset point of the current limit circuit lies at about 3 A, which is too low. Solve this problem by replacing T1 with a Type BC517 darlington transistor, and R20 with a 82kΩ resistor.

2. Depending on the current transfer ratio of the optocoupler used, the transformer produces ticking noises. This effect, which is caused by overshoot in the pre-regulation circuit, may be traced with the aid of an oscilloscope monitoring the voltage across C26 at a moderate load current. The capacitor must be charged at each cycle of the mains frequency, and not once every five cycles. The problem is best solved by reducing the amplification of the regulation circuit. Replace R17 with a 39 kΩ resistor, and create feedback by fitting it between the base and the collector of T3. Also add a resistor in series with the optocoupler. These two changes are illustrated in Figs. 1 and 2. Lower R16 to 10 kΩ, increase C24 to 10 µF, and increase R15 to 270 kΩ.

3. Excessive heating of the transformer is caused by a d.c. component in the primary winding. This is simple to remedy by fitting a capacitor of any value between 47 nF and 470 nF, and a voltage rating of 630 V, across the primary connections. This capacitor is conveniently mounted on to the PCB terminal block that connects the transformer to the mains.

4. One final point: when using LED DVMs for the voltage/current indication, their ground line must be connected to the **positive** terminal of C12.

1

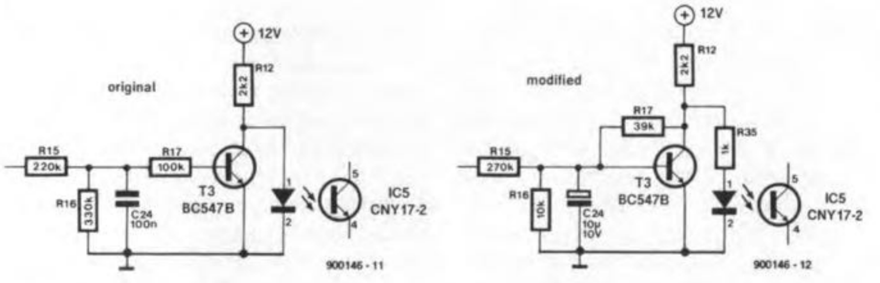

2

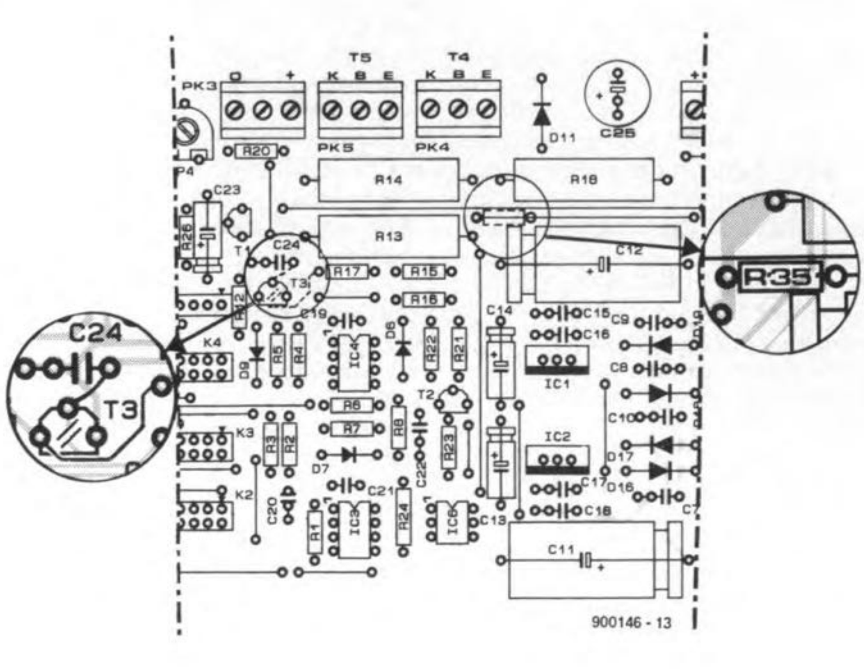

Hard disk monitor

December 1989

In some cases, the circuit will not reset properly because the CLEAR input of IC3A is erroneously connected to ground. Cut the ground track to pin 3 of IC3, and use a short wire to connect pin 3 to pin 16 (+5 V).

Microprocessor-controlled telephone exchange

October 1990

In some cases, the timing of the signals applied to IC17 causes a latch-up in the circuit, so that the exchange does not detect the state of the connected telephones properly. Solve this problem by cutting the track to pin 1 of IC17, and connecting pin 1 to ground (a suitable point is the lower terminal of C6).

The text on the fitting of wires on the BASIC computer board (page 19, towards the bottom of the right-hand column) should be modified to read: 'Finally, connect pin 6 of K2 to pin 7 of IC3 ($\overline{Y7}$ signal).'

S-VHS/CVBS-to-RGB converter (2)

October 1990

The capacitor marked 'C37', next to R21 on the component overlay (Fig. 7b and ready-made printed circuit board), should be marked 'C39'.

In case they are difficult to obtain locally, inductors type 119-LN-A3753 (L1) and 119-LN-A5783 (L2) may be replaced with the respective types 119-ANA-5874HM and 119-ANA-5871HM, also from Toko, Inc. Suggested suppliers are Cirkit Distribution Ltd., and C-I Electronics.

EPROM simulator

December 1989

Counters IC3 and IC4 may not function properly owing to a too low supply voltage. This problem may be solved by replacing IC12 with a 7806. Alternatively, use BAT85 diodes in positions D1 and D2.

Programmer for the 8751

November 1990

The ready-programmed 8751 for this project is available at £35.25 (plus VAT) under order number **ESS 7061**, not under order number ESS 5951 as stated on the Readers Services pages in the November and December 1990 issues.

MEDIUM POWER A.F. AMPLIFIER - PART 2

by T. Giffard

Construction

The entire circuit shown in Fig. 2 can be built on the printed circuit board in Fig. 4. The enclosure discussed later on houses the power supply, the various indicators, the on-off switch and all interconnecting wiring.

Dual transistors T1, T2, T5 and T6 are fairly expensive items but they are essential to achieve the high performance. Nevertheless, if your are prepared to accept a somehwat degraded performance, or if you want to experiment, try using BC550/BC560 transistors. These should, of course, be matched pairs to ensure adequate thermal stability. We should add that in our prototypes these devices did not give good results.. Figure 5 shows how the three different types of transistor can be accommodated on the board.

Preset P1 is of a type that can be adjusted from the top to allow setting once the board has been fully populated.

Construction of L1 is shown in Fig. 6. It consists of three layers of 1.5 mm enamelled

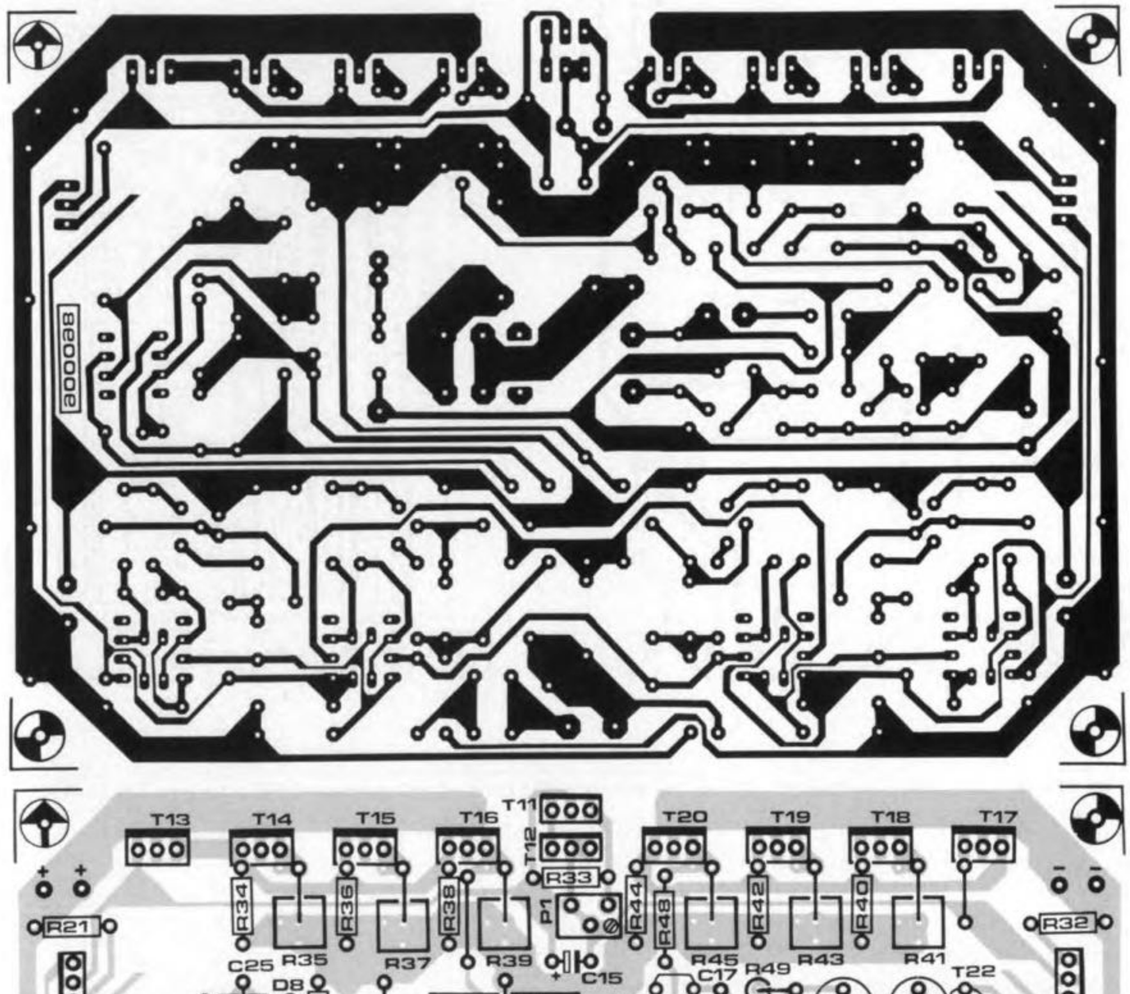

Fig. 4. Printed circuit board for the medium power a.f. amplifier.

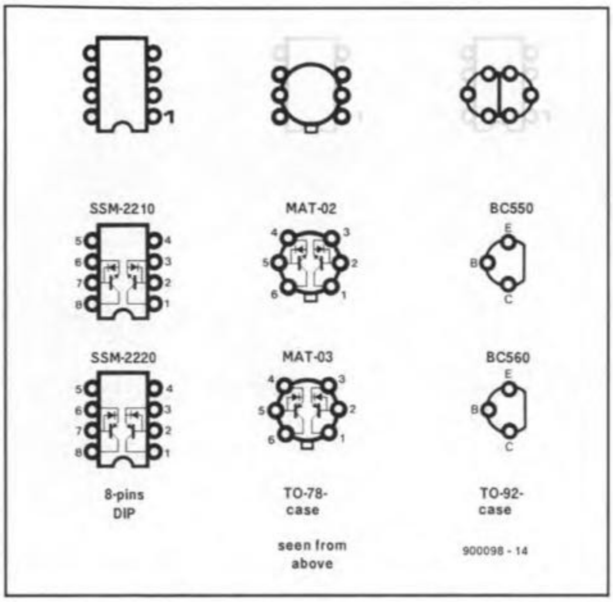

Fig. 5. This shows how the three types of transistor in the T1, T2, T5 and T6 positions may be fitted on the board.

Fig. 6. Output inductor L1 is wound in three layers.

copper wire wound on a 12 mm dia. mandril. The first layer consists of 7, the second of 6 and the last of 5 turns.

Since indicator D7 is located on the front panel, two solder pins in the D7 position on the board will facilitate the wiring later on.

Some standard resistors and all 5-watt types are mounted vertically. This may necessitate lengthening one of the terminals of the 5-watt resistors.

The emitter resistorsof the power transistors should preferably be inductance-free types, but these are very difficult to obtain. Moreover, they are fairly expensive. We have, however, found a very good alternative, which consists of using standard 5-watt resistors in parallel with a 100 nF capacitor, which is soldered at the underside of the board as shown in Fig. 7.

Drivers T9 and T10, as well as T4 and T8, should be fitted, electrically isolated, on small heat sinks, which may need some mechanical support.

Transistors T11–T20 may be screwed directly on to the heat sink. The drawing of the board may be used as a template, since the positions of the centre terminals of the transistors coincide with the distances between the fitting holes. The centre of the holes must be 18 mm above the top of the board. It is advisable to buy the enclosure and heat sink and first ascertain how the heat sink is best fitted to the rear of the enclosure. Enough space must be left for the mains input socket, the phone sockets, the fuse and the loudspeaker connectors. The holes to be drilled in the heat sink are best provided with M3-size threads, since it is virtually impossible to use nuts with this type of heat sink.

The transistors must be isolated from the heat sink. This is best done with the aid of a suitable heat sink compound and ceramic washers: these have a smaller transfer resistance than mica washers.

Transistors T11 and T12 are fitted on to the board in a way that enables both of them to be screwed to the heat sink with one screw and one insulating washer.

Once the construction has been determined, bend the terminals of the driver, output and 'zener' transistors as shown in Fig. 8, so that they protrude slightly from the board; their mounting washers should be located 18 mm above the board. Only when all that has been arranged should the terminals be soldered.

The supply and loudspeaker connections should be made with heavy-duty connectors, since these will carry fairly high currents.

The enclosure

The stereo version of the amplifier is best fitted in a 2-unit high 19-inch enclosure. With the heat sink fitted to the rear panel, there is enough space left for the various connectors.

The front panel houses the mains on-off switch with above it an LED that is connected to one of the power rails via a 5.6 kΩ resistor. It also contains the two LEDs of the protection circuits.

Two rectangular holes must be cut into the rear panel to enable the transistors to be screwed to the heat sink. Make these holes rather slightly too large than too tight to avoid any danger of a transistor touching the enclosure.

The power supplies are fitted in the front section of the enclosure. Each of them is switched by one of the poles of the mains on-off switch.

PARTS LIST

FOR EACH CHANNEL

Resistors:
R1 = 1 k*
R2 = 47k5*
R3,R4,R15,R16 = 4k75*
R5,R14,R21,R32 = 22R1*
R6,R7,R12,R13 = 47R5*
R8,R11,R51,R53 = 10 k
R9,R10 = 2k2
R17 = 2k21*
R18 = 100 R*
R19,R20,R30,R31 = 221 R*
R22,R27,R49 = 15 k
R23,R24,R28,R29 = 10 R*
R25,R26,R34,R36,R38,R40,R42, R44 = 100 R
R33,R47 = 270 R
R35,R37,R39,R41,R43,R45 =0R27; 5 W;low-inductance but see text on p. 46
R46 = 8R2; 5 W
R48 = 470 R
R50 = 47 k
R52,R54,R55 = 100 k
R56 = 270 R; 1 W
R57 = 1k8
R58 = 560 k
R59 = 47 R
R60,R61 = 1 M
R62 = 4k7 (8k2 if MAT transistors are used)
R63,R64 = 2k7
P1 = 2 k, 12-turn preset for vertical mounting
* = 1% tolerance

Capacitors:
C1,C2 = 1 µF, MKT
C3 = 820 pF, polystyrene
C4,C5,C22 == 220 µF; 40 V radial
C6,C7 = 33 nF
C8,C9,C12,C13,C15 = 10 µF; 10 V
C10,C11 = 2n2
C14 = 100 pF polystyrene
C16 = 82 nF
C17 = 330 pF
C18, C19 = 10 µF; 40 V; bipolar
C20 = 15 nF
C21 = 220 µF; 10 V; radial
C23, C24 = 270 nF
C25, C26 = 47 µF; 25 V

Semiconductors:
D1,D2 = 5V6; 400 mW zener
D3,D4 = high-effeiciency LED, red, 3 mm
D5 = 1N4001
D6,D8,D9 =1N4148
D10,D11 = 15 V; 400 mW zener
T1,T2 = SSM2210 (MAT02)
T3,T4,T24 = BC550C
T5,T6 = SSM2220 (MAT03)
T7,T8 = BC560C
T9,T12 = BD140
T10 = BD139
T11 = BD679
T13,T14,T15,T16 = BD911
T17,T18,T19,T20 = BD912
T21,T22,T23 = BC556B
T25 = BC546B
T26 = BC880
IC1 = LF411

Miscellaneous:
L1 = 1 µH air-cored (see text on p. 45)
Re1 = PCB relay, 24 V, 1 make contact (10 A)
9 ceramic insulating washers for TO220 cases
9 M3-size insulating washers
2 Heat sinks for T9, T10
2 Heat sinks for T4, T8
Heat sink <0.7 K/W, e.g. Fisher SK-85-75-SA

FOR EACH POWER SUPPLY
Transformer 2×25 V, 4.5 A, e.g. ILPType 61016 (if 1 supply for 2 channels, 2×25 V, 6 A, e.g. ILP Type 71016)
4 electrolytic capacitors, 10,000 µF, 50 V radial (if 1 supply for 2 channels, 6×10,000 µF, 50 V)
Mains input socket with integral fuse holder
fuse 2 A slow (mono); 4 A slow (stereo)
Bridge rectifier 50 V, 10 A
Mains on-off switch, 6 A, 2-pole
Phono sockets as required
Phono plugs as required
2-unit high 19-inch enclosure

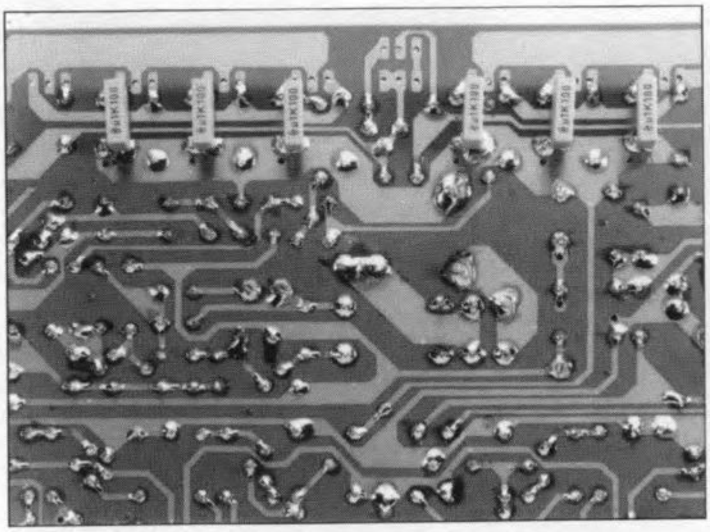

Fig. 7. If low-inductance resistors are difficult to obtain, standard 5-watt resistors, shunted by 100 nF capacitors, may be used. The capacitors are fitted at the underside of the board as shown. Holes for them are provided.

Fig. 8. The terminals of the driver, output and 'zener' transistors are bent as shown to make the devices protrude slightly from the board.

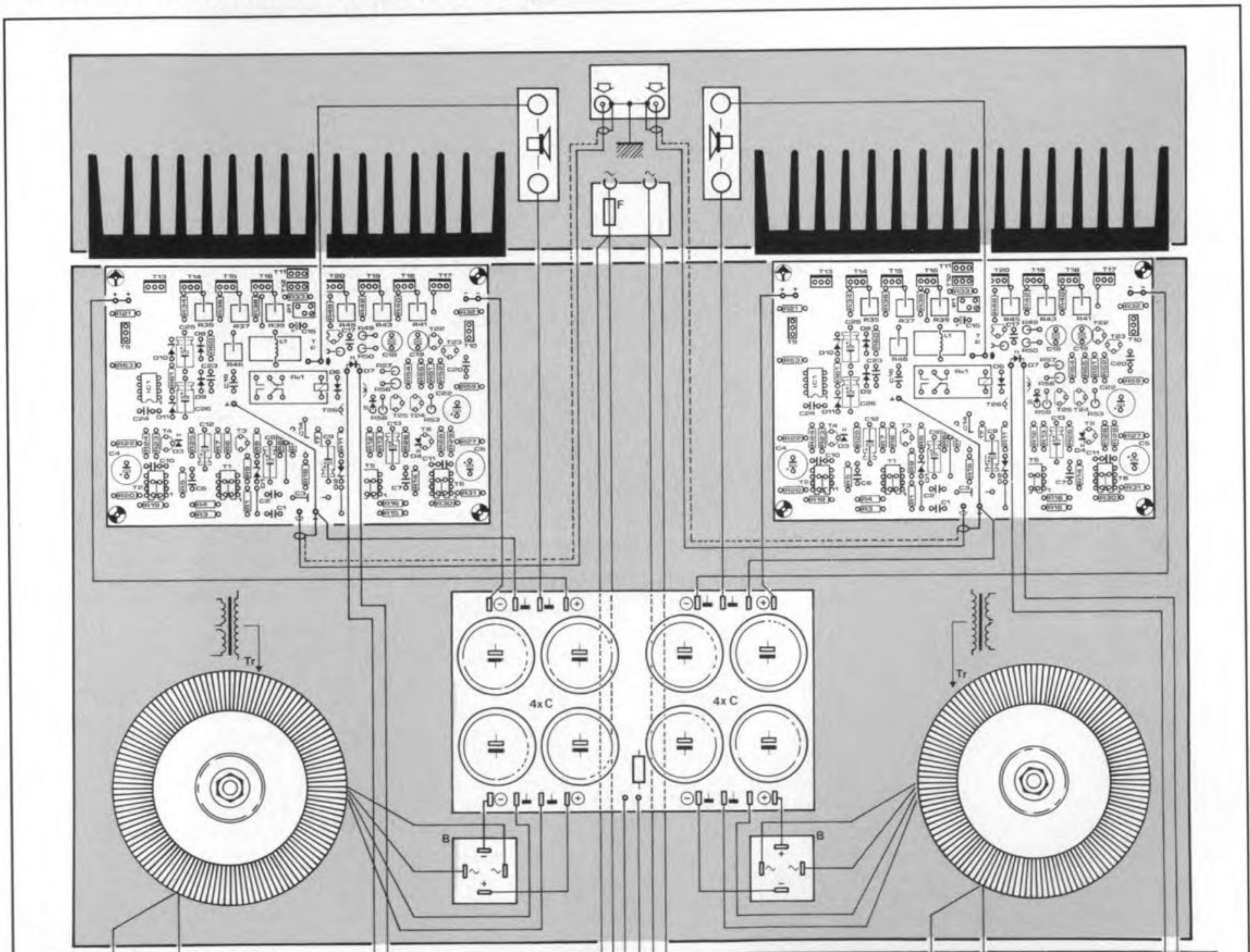

Fig. 9. Wiring diagram of the stereo amplifier.

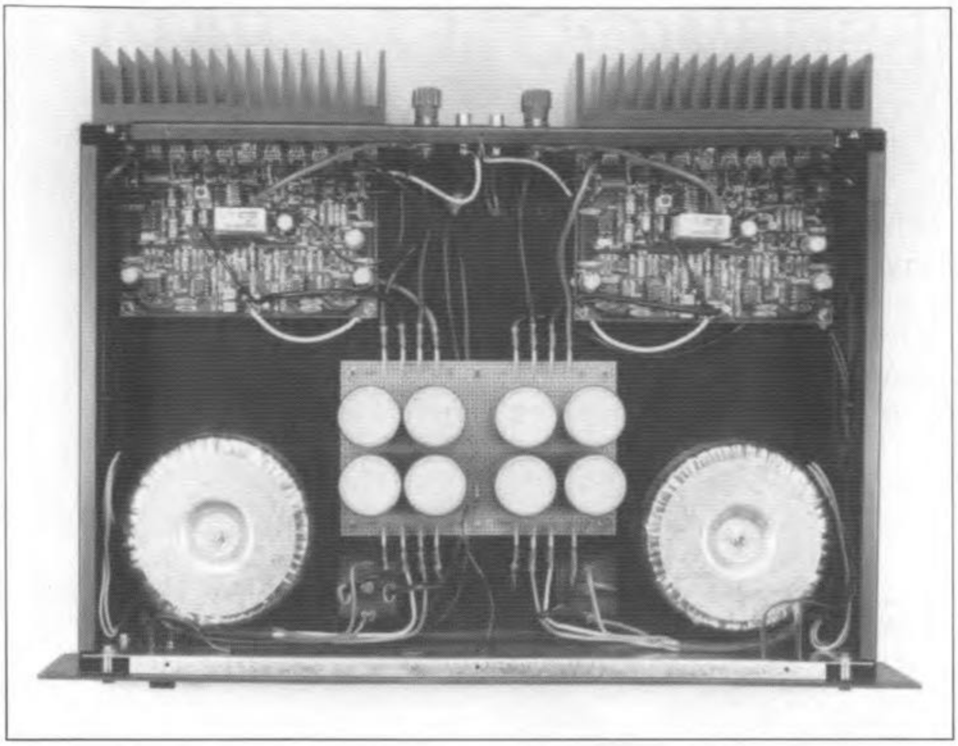

Fig. 10. Inside view of a completed prototype of the stereo amplifier.

The electrolytic capacitors are mounted together on a piece of prototyping board; interconnections are made in heavy-duty copper wire at the underside of the board. It is, of course, also possible to use standard types of electrolytic capacitor and fit these in the enclosure with the aid of clips.

The wiring diagram in Fig. 9 shows that the stereo amplifier consists of two virtually separate mono amplifiers, which makes the construction of a mono amplifier very simple. The earths of the two sections are interlinked and connected to the enclosure only at the phono sockets.

The inputs of the boards must be connected to the phono sockets by good-quality screened cable, the screen of which may be soldered to earth at both ends. Do not use cheap cable here since the capacitance of that may adversely affect the *RC* network at the input of the amplifier.

The inside of the completed prototype is shown in Fig. 10.

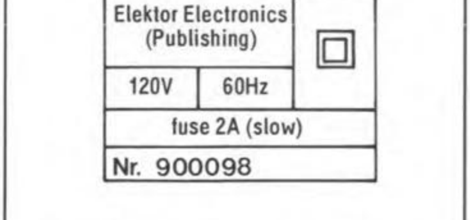

Fig. 11. Suggested labels for affixing at the rear of the amplifier unit.

Calibration and operation

Before switching on the amplifier for the first time, it is advisable to check a few points.

Remove the power lines from the amplifier boards and switch on the mains. Measure the potential across the electrolytic capacitors, which should be between ±32 V and ±38 V. Switch off the mains and discharge the capacitors via a 1 kΩ resistor. Reconnect the power lines.

Set P1 on both boards to maximum resistance and check with an ohmmeter that this is really maximum. This check prevents a large quiescent current flowing immediately after switch-on.

If you are not fully confident that everything is all right, before you switch on the mains again, temporarily insert a 15 Ω, 5 watt resistor in series with each of the supply rails; this will prevent the current rising above 2 A. If the output stages appear to function normally and no components are getting unduly hot, these resistors may be removed after the mains has been switched off (but see below).

Switch on the mains again and measure the potential across one of the emitter resistors of the output transistors. If necessary, adjust P1 to get a drop of 9 mV across the resistor: this is equivalent to a quiescent current of 100 mA. If you do not possess a suitable millivoltmeter, leave the 15 Ω resistors in the power lines and measure the potential across them: this should be 2 V for a quiescent current of 100 mA.

A number of test points are given in the circuit diagram in Fig. 2: values measured there should be about the values shown in the oval boxes.

For peace of mind, check the base voltages of T9 and T10 (which should preferably be a matched pair) and the potentials across their emitter resistors R21 and R32. These should be ikdentical, or nearly so.

Furthermore, the direct voltage at the output of IC1 (pin 6) should be smaller than 10 V. If that is not so, the value of R62 should be reduced to the next lower preferred value in the E-series.

Operation of the amplifier is straightforward. The design allows it to be operated continuously over very long periods with an 8- or 4-ohm load. Continuous loading into 2 Ω is not advisable for more than a few minutes, however (the rating of the heat sinks does not allow that).

The power supply allows a music output of close to 200 W into a 2 Ω load. ■

SOME USEFUL ADDRESSES

General and special audio equipment and components:

Wilmslow Audio, Wellington Close,
Parkgate Trading Estate, Knutsford
WA16 8DX, Telephone (0565) 50605.

Hart Audio Kits, 3 Penylan Mill, Oswestry,
Salop SY10 9AF, Telephone (0691) 652894.

Sage Audio, Construction House, Bingley,
W. Yorks BD16 4JH, Phone (0274) 568647.

Audiokits Precision Components, 6 Mill
Close, Borrowash, Derby DE7 3GU,
Telephone (0332) 674929.

Russ Andrews Turntable Accessories Ltd,
Edge Bank House, Skelsmergh, Kendal,
Cumbria LA8 9AS, Telephone (0539) 83247.

Henry's Audio Electronics,
404 Edgware Road, London W2 1ED,
Telephone 071 723 1008.

B.K. Electronics, Unit 5, Comet Way,
Southend-on-Sea, Essex SS2 6TR,
Telephone (0702) 527572.

Maplin Electronics, P.O. Box 3, Rayleigh,
Essex SS6 8LR, Telephone (0702) 552911.

OMNI Electronics, 174 Dalkeith Road,
Edinburgh EH16 5DX,
Telephone 031 667 2611

Heat sinks:

Dau (UK) Ltd, 70–75 Barnham Road,
Barnham, West Sussex PO22 0ES,
Telephone (0243) 553031

MEDIUM POWER A.F. AMPLIFIER - PART 2

by T. Giffard

Construction

The entire circuit shown in Fig. 2 can be built on the printed circuit board in Fig. 4. The enclosure discussed later on houses the power supply, the various indicators, the on-off switch and all interconnecting wiring.

Dual transistors T1, T2, T5 and T6 are fairly expensive items but they are essential to achieve the high performance. Nevertheless, if your are prepared to accept a somehwat degraded performance, or if you want to experiment, try using BC550/BC560 transistors. These should, of course, be matched pairs to ensure adequate thermal stability. We should add that in our prototypes these devices did not give good results.. Figure 5 shows how the three different types of transistor can be accommodated on the board.

Preset P1 is of a type that can be adjusted from the top to allow setting once the board has been fully populated.

Construction of L1 is shown in Fig. 6. It consists of three layers of 1.5 mm enamelled

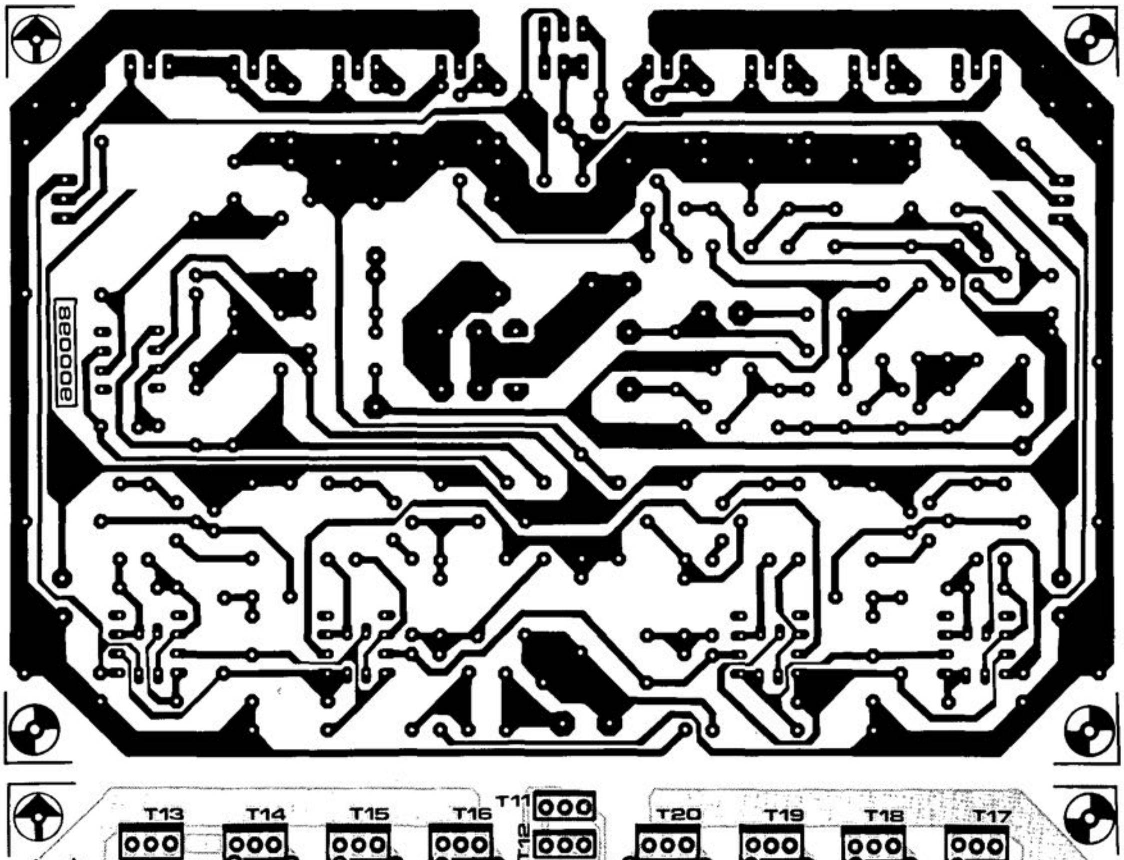

Fig. 4. Printed circuit board for the medium power a.f. amplifier.

Medium-power A.F. amplifier

October and November 1990

A circuit board to accommodate the smoothing capacitors in the symmetrical power supply section of the amplifier was designed after publication of Part 2 of this project. The track layout (mirror image) and the component mounting plan are given in Fig. 3 to assist readers in producing this PCB, which is not available ready-made. ■

3

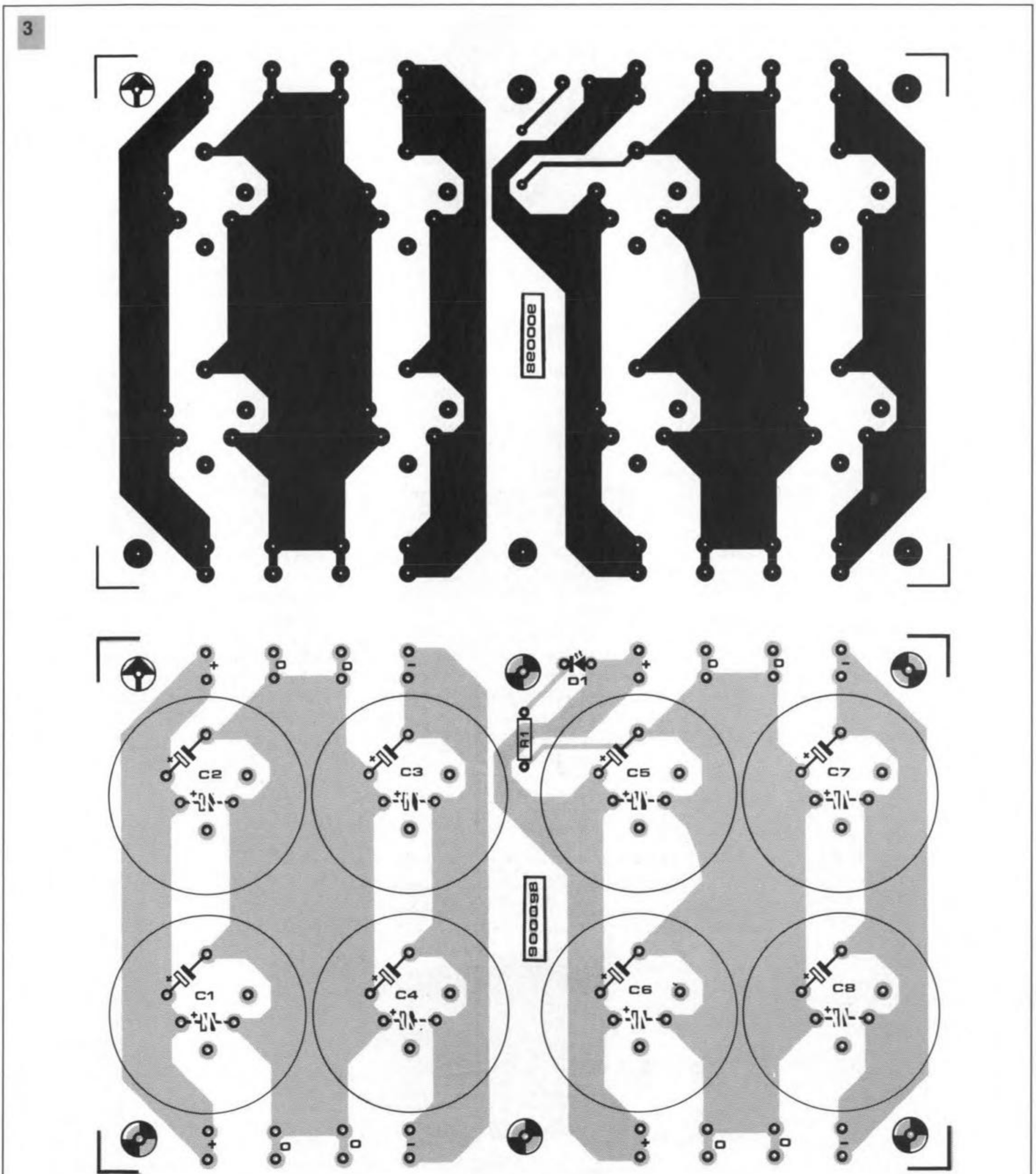

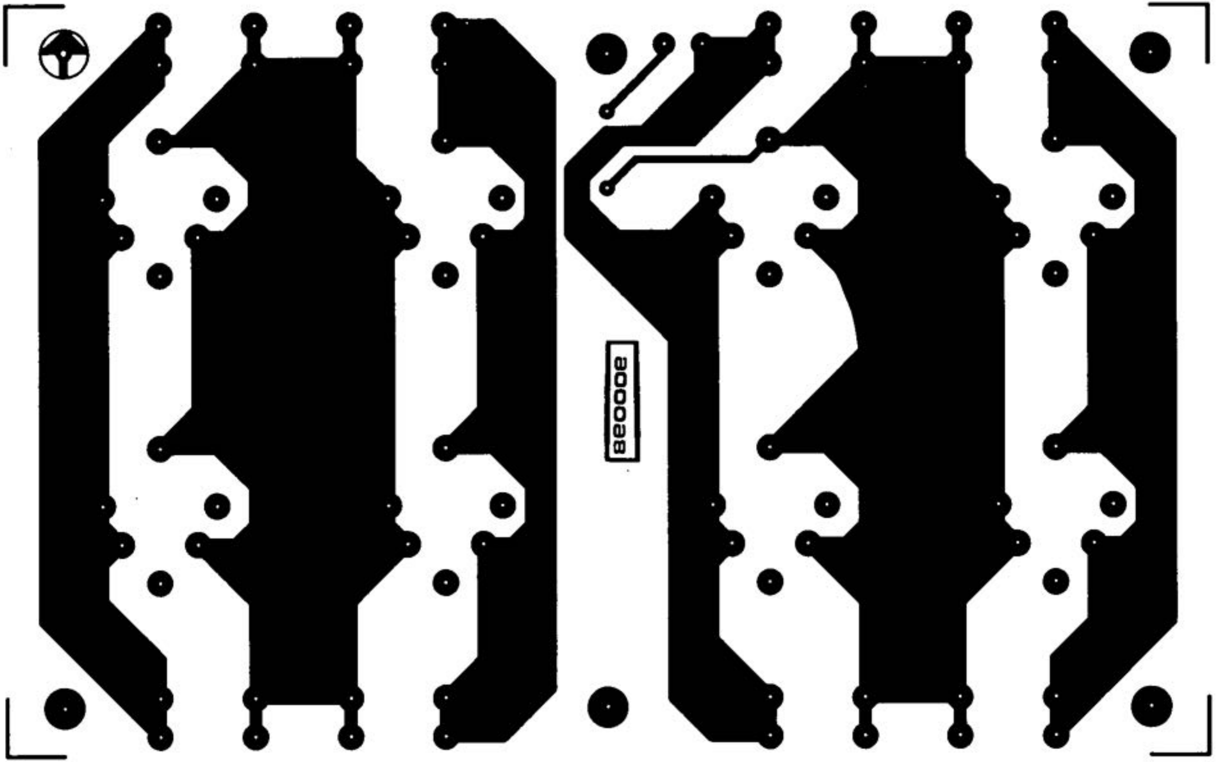

ACTIVE MINI SUBWOOFER - PART 1

by T. Giffard

900122-I

There are many people who cannot, or will not, have the large loudspeakers in their living room that are necessary for good reproduction of music, and therefore use smaller models. Although many of these nowadays perform very well, they fall short of good reproduction of bass frequencies. The active subwoofer described in this article enables that deficiency to be eliminated.

IT is a basic fact of nature that the faithful reproduction of bass frequencies by a loudspeaker requires the displacement of a large volume of air. That in turn requires the cone of the drive unit to have a large area and a large linear movement. Since a drive unit in a box displaces large volumes of air at frequencies below the lower −3 dB cut-off point, which is, of course, very inefficient, it is necessary for good efficiency to design the enclosure in a way that ensures that the cut-off point lies well below 30 Hz.

These requirements are difficult to combine if the dimensions of the box are to be kept small. As often in life, it is therefore necessary to arrive at a compromise. However, if it is assumed that the user of the subwoofer is not going to need hundreds of watts of power output, that compromise works out very well.

Choice of drive unit

The subwoofer uses the new Type 10V516 drive unit from the French manufacturer Focal—see Fig. 1. This is a 25-cm unit with a fairly heavy, stiff cone, which consists of a paper carrier on to which a layer of polyglass, a mixture of tiny glass pellets and resin, has been deposited.

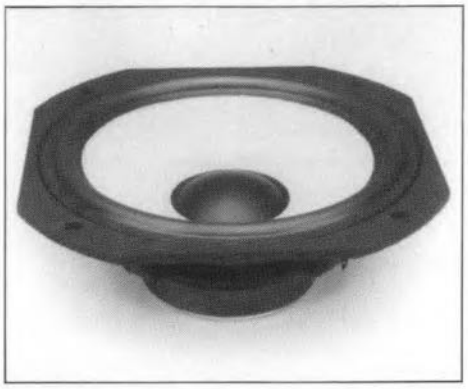

Fig. 1. The new Type 10V516 drive unit from Focal.

The unusually long (23 mm) speech coil can move linearly over a distance of 12 mm peak-to-peak. The total air displacement of 394 cm^3 is exceptionally good for a 25-cm unit. The coil is wound from flatwire on a specially designed carrier.

The Thiele-Small parameters of the unit—$f_s = 23$ Hz; $Q_{ts} = 0.42$; $V_{as} = 132$ l—make it eminently suitable for use in an enclosure with a net volume of 35 l. The −3 dB point lies around 43 Hz at a reasonable Q_{tc} of about 0.8.

Prototypes of the subwoofer had a response curve that was virtually identical with the computed one. True, the cut-off point was not as low as one would have liked, but with electronic correction it is possible to shift it to below 30 Hz without reducing the maximum attainable sound pressure too much (the greater the correction, the sooner the drive unit reaches the limit of its linear movement).

Electronic correction

In order to render the lowest tones of a compact disk or gramophone record well audible, a simple electronic network was used to straighten the lower part of the response of the subwoofer to just under 30 Hz. This network was designed originally by one of the great audio researchers, Siegfried Linkwitz, and is shown in Fig. 3 with on the opposite page the simple formulas for calculating the component values.

The wanted correction is computed on the basis of the Thiele-Small parameters. You first measure or calculate Q_{tc} and f_c of the drive unit fitted in an enclosure, choose the required new Q_{tc} and f_c and then compute

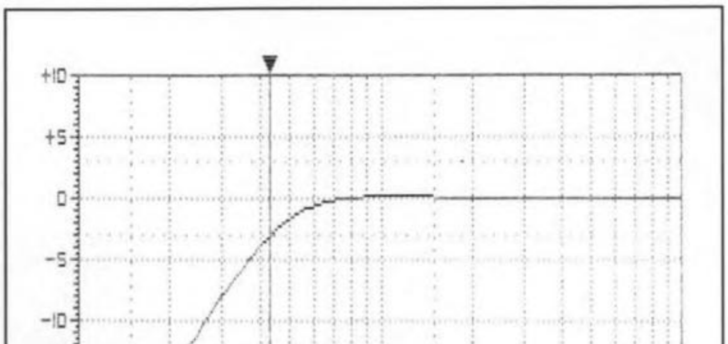

Fig. 2. Computed response curve of the 10V516 drive unit in a closed box.

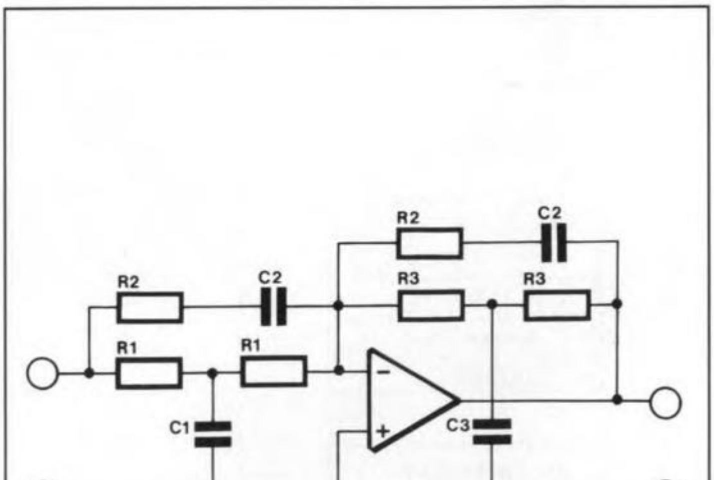

Fig. 3. The Linkwitz correction network.

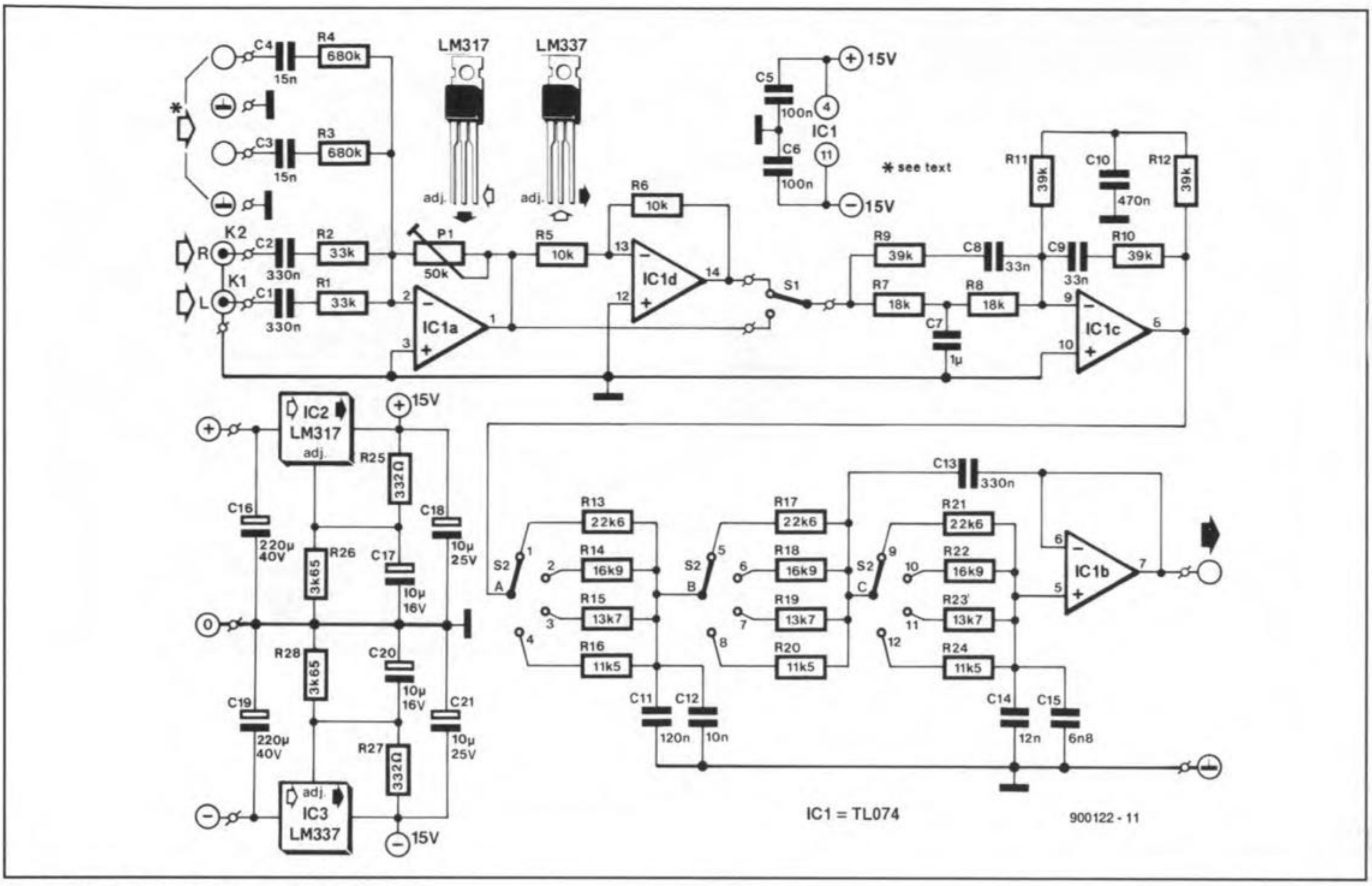

Fig. 4. Circuit diagram of the correction-filter unit.

Linkwitz correction network formulas

Required data:
Q_{tc} = quality factor of drive unit in closed box;
f_c (resonance frequency of drive unit).

Wanted new parameters:
$Q_{tc'}$ = new quality factor with correction network;
$f_{c'}$ = new resonance frequency with correction network.

Condition for chosen factors:

$$k = \frac{f_c / f_{c'} - Q_{tc} / Q_{tc'}}{Q_{tc} / Q_{tc'} - f_{c'} / f_c} > 0$$

where k is the pole-shifting factor.

Calculation:
Choose a value for R1 and then calculate values of other components as follows:

$$R2 = 2kR1$$

$$R3 = R1(f_c / f_{c'})^2$$

$$C1 = \frac{2Q_{tc}(1+k)}{2\pi f_c R1}$$

$$C2 = \frac{1}{4\pi f_c Q_{tc} R1(1+k)}$$

$$C3 = C_1(f_{c'} / f_c)^2$$

the component values with the formulas. It should be borne in mind that corrections must remain within certain limits, since the drive unit must be able to handle the additional large displacements. In the design as described, the maximum correction is just over 6 dB, which lowers the cut-off point by about 10 Hz.

A further point in connection with the calculation of the network is that in practice the results will be different from the theoretical overall response curve. Note, for instance, that the values of a number of components in Fig. 4 are quite different from the calculated values. This is because after calculating the values, we entered them, together with the the measured drive unit performance data, into a simulation program, on the results of which we adapted the values to obtain an optimum response curve (the components included C1 and C2).

In Fig. 4, IC1a is a summing amplifier. The input signals from the left- and right-hand channels, which are at line level, enter via C1-R1 and C2=R2 respectively. Depending on the position of P1, the sum of the signals is amplified to some degree and then applied to the correction network, which is based on IC1c.

There are also two high-level inputs to which the signal from the (integrated) output amplifier may be connected. These signals are brought back to line level by R3 and R4.

Switch S1 enables selecting between the normal and inverted signal. The inverted (by IC1d) signal provides a phase-correct coupling with the existing loudspeakers).

The correction network, in combination with C1 and C2, provides a peak of just over 6 dB at 35 Hz, which results in the low −3 dB cut-off point of the subwoofer shifting down to about 28 Hz.

The correction network is followed by a third-order low-pass filter, based on IC1b, with Butterworth characteristic. Switch S2 enables the selection of four different cut-off points: 75 Hz, 100 Hz, 125 Hz and 150 Hz to enable optimum coupling between the subwoofer and the existing loudspeakers. One branch of the filter is shown in Table 1, which also gives formulas for calculating different

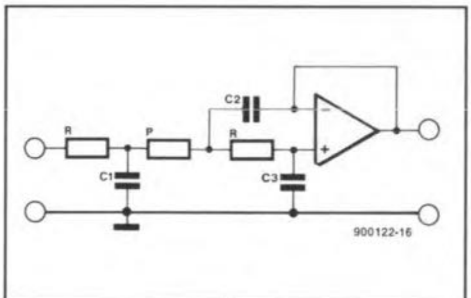

BUTTERWORTH	BESSEL
$C_1 = 0.2215 / fR$	$C_1 = 0.1572 / fR$
$C_2 = 0.5644 / fR$	$C_2 = 0.2265 / fR$
$C_3 = 0.03221 / fR$	$C_3 = 0.04039 / fR$

Table 1. Formulas for calculating the cut-off points in the third-order low-pass filter based on IC1b.

PARTS LIST

Resistors:
R1, R2 = 33 k
R3, R4 = 680 k
R5, R6 = 10 k
R7, R8 = 18 k
R9–E12 = 39 k
R13, R17, R21 = 22k6; 1%
R14, R18, R22 = 16k9; 1%
R15, R19, R23 = 13k7; 1%
R16, R20, R24 = 11k5; 1%
R25, R27 = 332 R; 1%
R26, R28 = 3k65; 1%
P1 = 50 k preset

Capacitors:
C1, C2, C13 = 330 nF
C3, C4 = 15 nF
C5, C6 = 100 nF
C7 = 1μF
C8, C9 = 33 nF
C10 = 470 nF
C11 = 120 nF
C12 = 10 nF
C14 = 12 nF
C15 = 6n8
C16, C19 = 220 μF; 40 V
C17, C20 = 10 μF; 16 V
C18, C21 = 10 μF; 25 V

Semiconductors:
IC1 = TL074
IC2 = LM317
IC3 = LM337

Miscellaneous:
S1 = toggle switch, 1 change-over
S2 = rotary switch, 3-pole, 4-position
2 phone sockets
4 banana sockets
drive unit Type 10V516
loudspeaker cabinet wadding
PCB Type 900122-1

Some useful addresses of suppliers of good quality audio equipment and components are given on page 47.

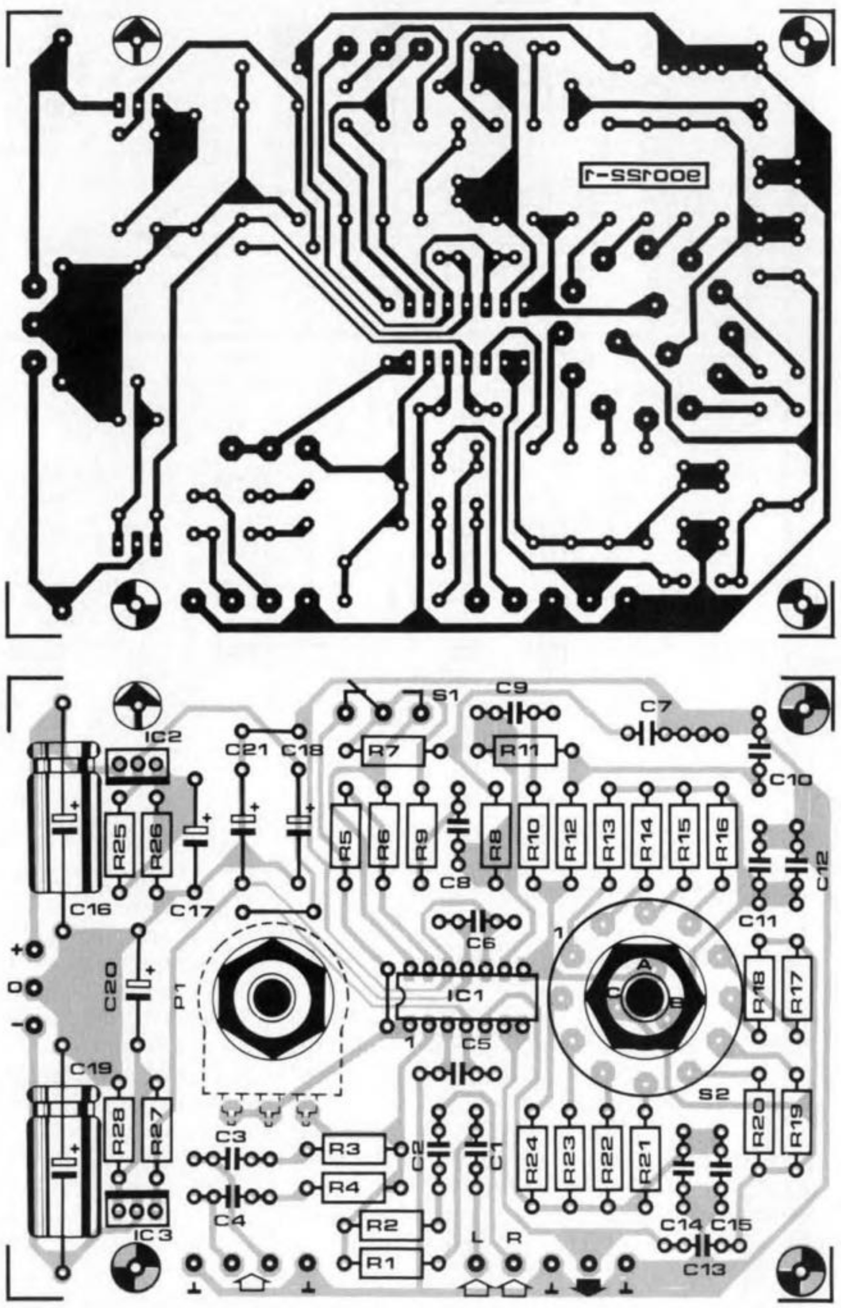

Fig. 5. Printed-circuit board for the correction-filter unit.

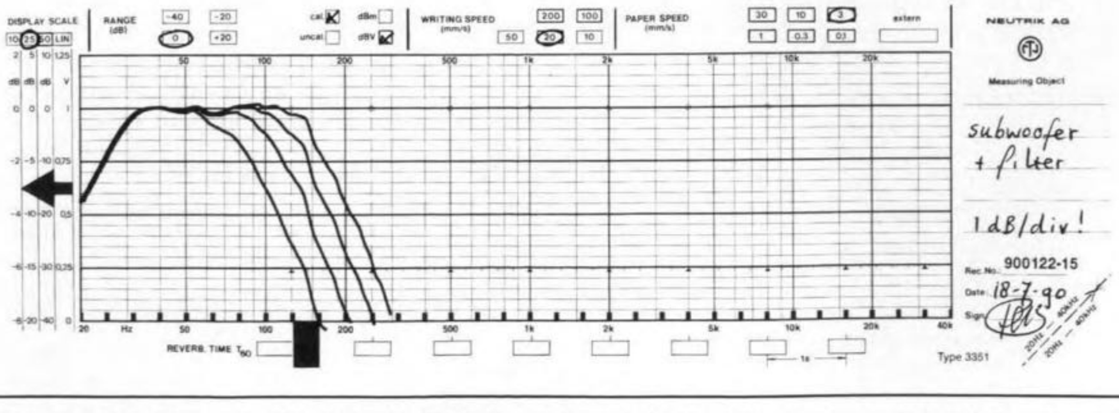

Fig. 6. Frequency response curve of the subwoofer at four different high cut-off points. Note that the grid here is 1 dB instead of the usual 2 dB.

cut-off points.

The output signal of IC1b is applied to the power amplifier, which in principle may be any type that delivers about 50 watts into a 5-ohm load. A possible design will be described in next month's issue.

Power for the circuit in Fig. 4 is derived from the power amplifier. Two regulators, IC2 and IC3 reduce the incoming voltage to ±15 V.

Construction

The construction diagram for the enclosure is given in Fig. 5. The box is a straightforward rectangular type made of 18 mm thick chipboard. The internal reinforcement struts may also be made from chipboard. The inset table shows that you may cut, or have cut, all required parts from a 122×122 cm board.

A separate compartment is reserved at the rear of the box to house the electronics (power amplifier, power supply, and correction-filter board).

A hole should be drilled in the rear panel for passing the cable to the drive unit. When that connection has been made, the hole should be closed with suitable wood filler.

The drive unit is screwed to the front panel; if the board used is sufficiently smooth, this may be done without a gasket. The cable may be connected to it with a car-type bullet plug and socket or blade and receptacle.

The enclosure should then be filled with suitable loudspeaker cabinet wadding. Its exterior can be finished to personal taste.

The correction and filter board—see Fig. 5—may now also be built up. It provides space for the switches, so that only the phono connectors need to be fitted separately. This will be reverted to next month.

The subwoofer may be tested at this stage by connecting a suitable power amplifier between it and the correction board. The correction board should be supplied with a voltage of 20–30 V.

Next month we will give further information about the installation of the electronics and how to connect the subwoofer to, and operate it with, an existing audio system.

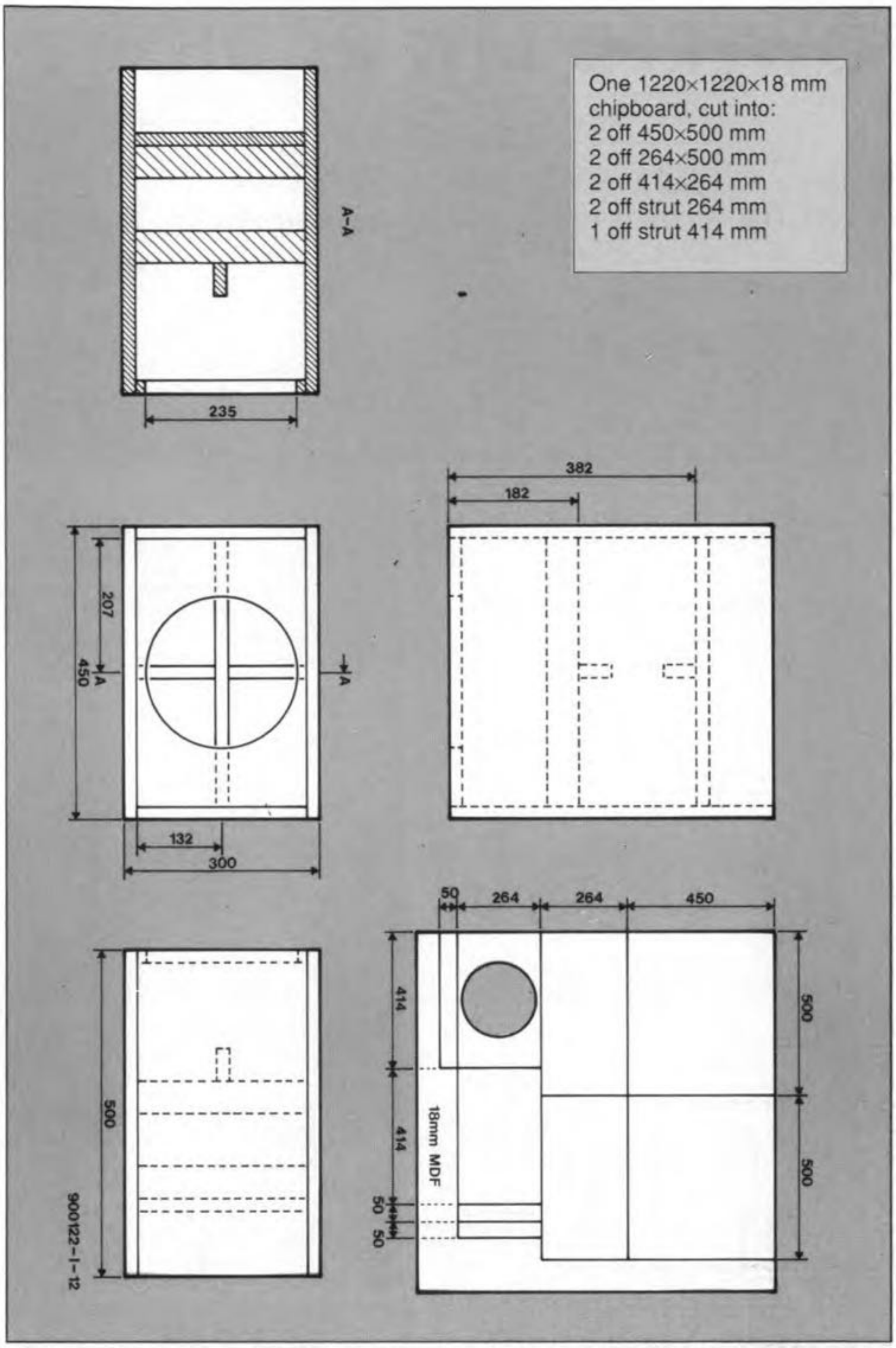

Fig. 7. Construction diagram for the enclosure of the subwoofer. Two internal struts ensure adequate robustness of the panels. The electronics are housed in a separate compartment at the rear.

AN EXTRAORDINARY TUBE FOR A SPECIAL TRANSMITTER

A Siemens grid-controlled transmitting tube had been operating for 65 248 hours over a period of eight years' service at the 990 kHz medium wave Rias transmitter in West Berlin. This period of service exceede, by a considerasble margin, not only the guarantee period of 4000 hours, but also the expected service life of 20 000 hours.

The transmitter in which the RS 2042 SK tube was used is in itself something out of the ordinary: the very name "Rias Berlin" is indicative of the station's special role in a divided post-war Germany and in the four-sector city of Berlin, for it stands for 'Radio In the American Sector' of Berlin. Set up as part of the US Information Service and run by a German director, Rias transmits two radio channels on medium wave and VHF, and has been broadcasting TV programmes since 1988. It can also be received on short wave.

The history of the station begins in February 1946 as wire broadcasting in the American sector; this was followed six months later by the first MW transmitter with an output power of 800 W. With its access to the air waves, the station initially served the political function of spanning the already widening gulf between East and Wes. Proclaiming itself the 'free voice of the free world' and with rapidly increasing transmitter power, it acquired during the Cold War a reputation as a reliable source of information extending far beyond the confines of Berlin and thus for the people behind the Iron Curtain.

PARTS LIST

Resistors:
R1, R2 = 33 k
R3, R4 = 680 k
R5, R6 = 10 k
R7, R8 = 18 k
R9–E12 = 39 k
R13, R17, R21 = 22k6; 1%
R14, R18, R22 = 16k9; 1%
R15, R19, R23 = 13k7; 1%
R16, R20, R24 = 11k5; 1%
R25, R27 = 332 R; 1%
R26, R28 = 3k65; 1%
P1 = 50 k preset

Capacitors:
C1, C2, C13 = 330 nF
C3, C4 = 15 nF
C5, C6 = 100 nF
C7 = 1μF
C8, C9 = 33 nF
C10 = 470 nF
C11 = 120 nF
C12 = 10 nF
C14 = 12 nF
C15 = 6n8
C16, C19 = 220 μF; 40 V
C17, C20 = 10 μF; 16 V
C18, C21 = 10 μF; 25 V

Semiconductors:
IC1 = TL074
IC2 = LM317
IC3 = LM337

Miscellaneous:
S1 = toggle switch, 1 change-over
S2 = rotary switch, 3-pole, 4-position
2 phone sockets
4 banana sockets
drive unit Type 10V516
loudspeaker cabinet wadding
PCB Type 900122-1

Some useful addresses of suppliers of good quality audio equipment and components are given on page 47.

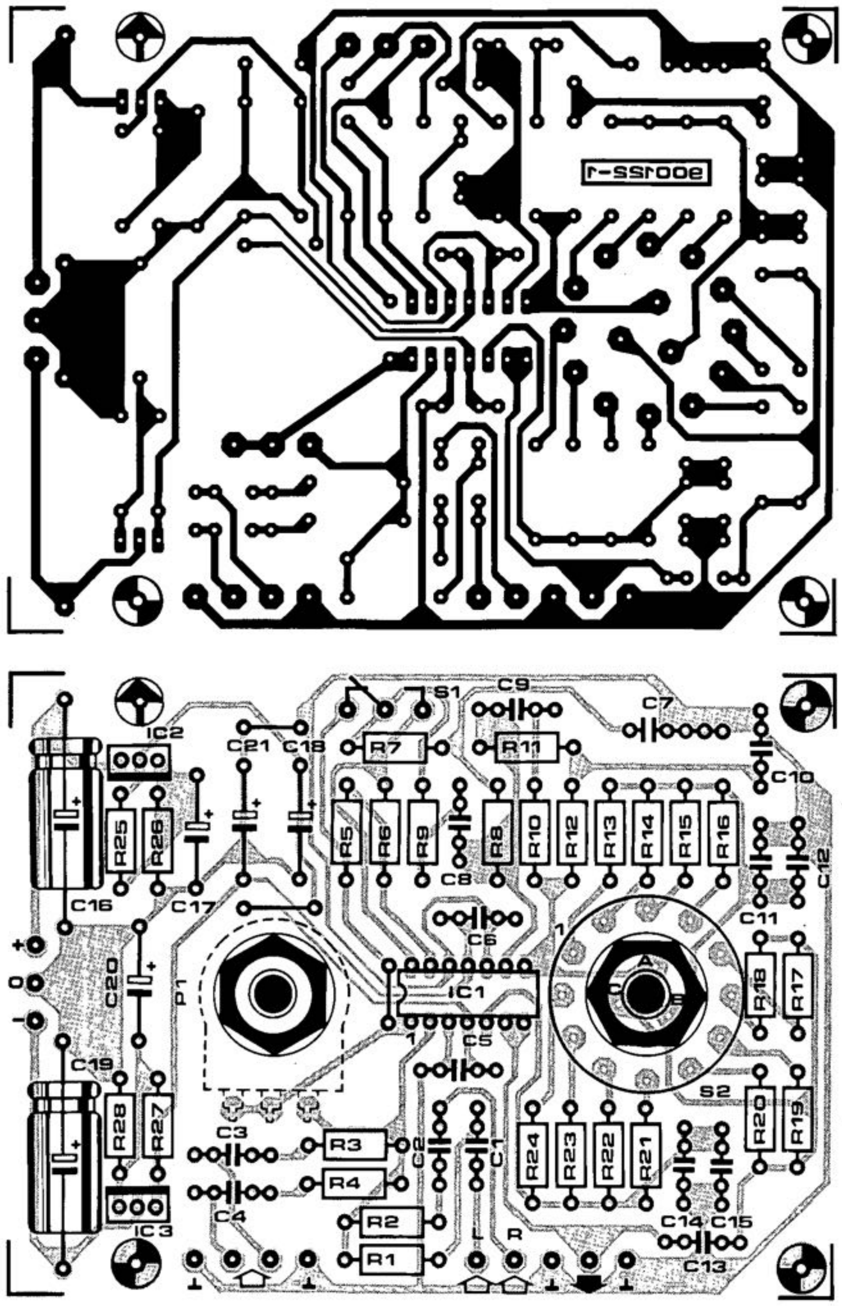

Fig. 5. Printed-circuit board for the correction-filter unit.

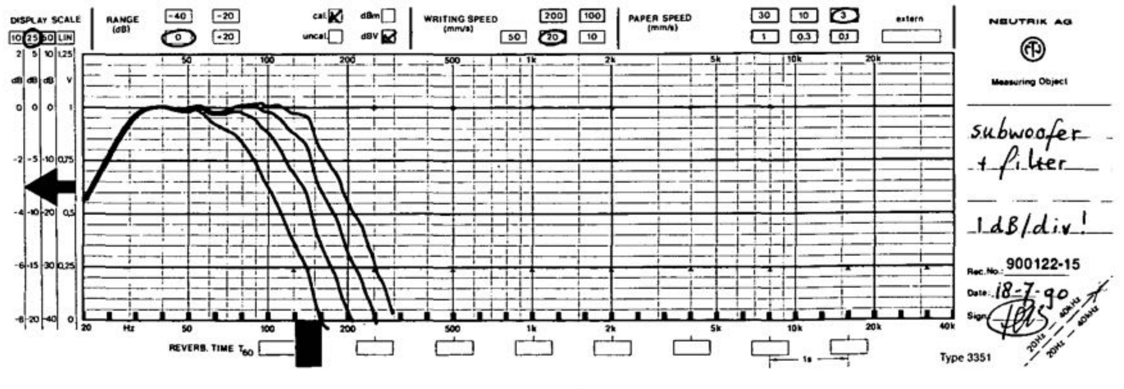

Fig. 6. Frequency response curve of the subwoofer at four different high cut-off points. Note that the grid here is 1 dB instead of the usual 2 dB.

SOLAR-POWERED MW RADIO

This article describes a miniature medium-wave band receiver powered by a solar cell. The circuit is based on a single integrated circuit, the ZN414Z from Ferranti.

M.S. Dhingra

ALTHOUGH the ZN414Z looks like an ordinary transistor in a TO-92 package (Fig. 2), the device contains quite a few things: a wide-band, three-stage amplifier with a very high input impedance, a demodulator circuit, and an automatic gain control (AGC) circuit. Its small size, high degree of integration and low power consumption make the ZN414Z eminently suited to building a miniature medium-wave band AM receiver with quite acceptable sensitivity and selectivity.

The circuit

The application circuit in Fig. 2 shows that the ZN414Z is followed by an audio amplifier, T1-T2, which raises the demodulated signal at pin 1 of the IC to a level suitable for driving a pair of headphones. The RF signal is picked up by a small ferrite rod assembly, which in the prototype was salvaged from a medium-wave transistor radio. The inductor is tuned by a 500-pF variable capacitor, C4. Since the input impedance of the ZN414Z is of the order of 4 MΩ, the tuned circuit is lightly loaded and thus ensures adequate selectivity. The value of R3 has been changed from the recommended value (cf. Fig. 1) to achieve the proper gain. Resistor R1 and diodes D1-D2 reduce the solar cell voltage to about 1.3 V for the IC. Capacitor C1 acts as a buffer device. The solar cell used is a 3-V type capable of supplying about 20 mA.

The output signal of IC1 is fed to a darlington transistor circuit, T1-T2, via coupling capacitor C2. The loudspeaker(s) connected between the collectors and the positive terminal of the solar cell should have a minimum impedance of 50 Ω. The author used a miniature 100-Ω magnetic loudspeaker as found in modern telephone sets. High-impedance headphones as supplied with the well-known Walkman® may also be used.

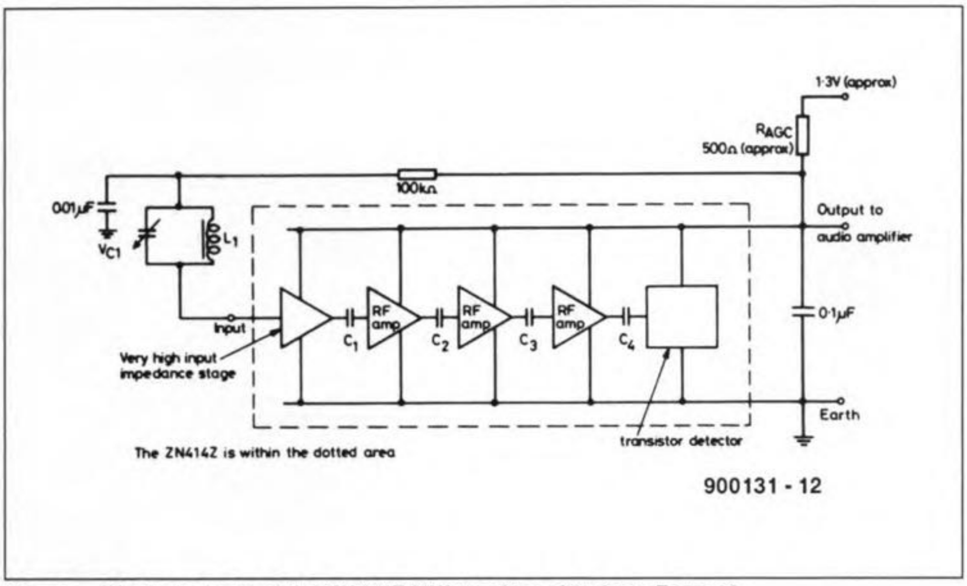

Fig. 1. Block diagram of the ZN414Z MW receiver chip from Ferranti.

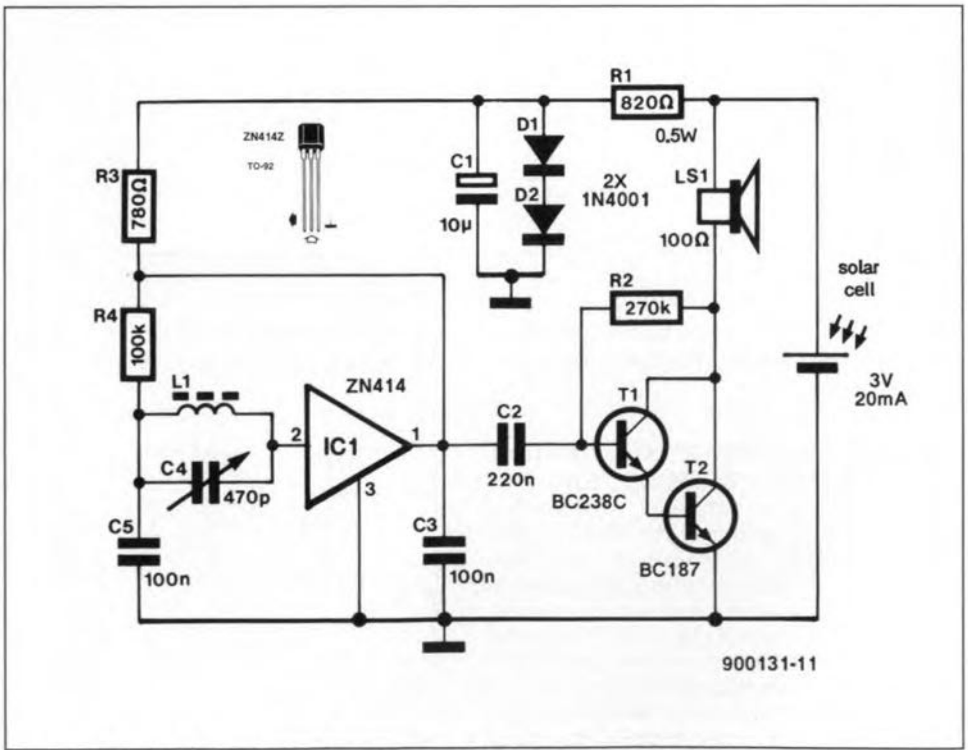

Fig. 2. Circuit diagram of the solar-powered medium-wave AM receiver.

Construction

The circuit is so small that it is easily built on a piece of stripboard. Clearly, miniature components must be used if the receiver is to fit in, say, a matchbox. Make sure the ZN414Z is properly connected—see the pinning diagram in Fig. 2. Transistors T1-T2 can be mounted face to face. Capacitor C1 is preferably a mylar type as this is smaller than the more common polyester type. The final size of the receiver depends mainly on the size of the tuning capacitor, C4. The solar cell is simply glued on to one of the sides of the enclosure. To turn off the receiver, simply turn it over so that the solar cell lies face down, or cover the solar cell. ■

DESIGN IDEAS

1-OF-*N* DECODER

by G. Sankaran

Although 1-of-16 decoder chips are readily available, higher ratios have to be constructed from 1-of-16 types. Figure 1 shows how to build a 1-of-32 decoder from two 1-of-16 types.

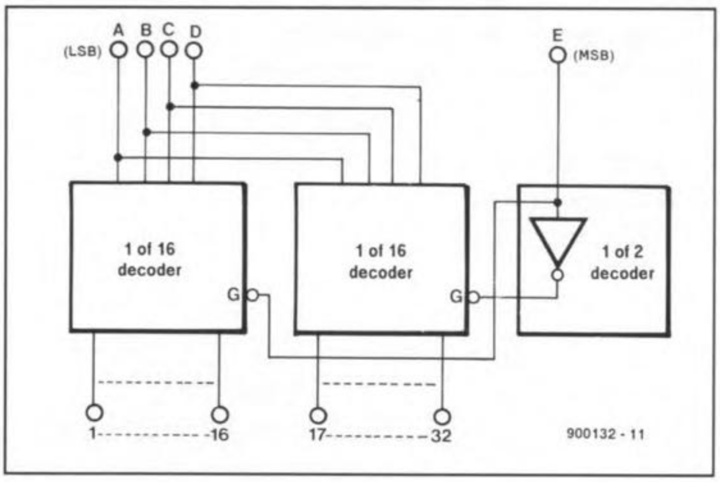

Figure 1

In a similar manner, this can be extended to any number, N, as shown in Fig. 2. Here the number of encoders is $N_2 = N / N_1$, while the output, $N = N_1 \times N_2 = 2^n$.

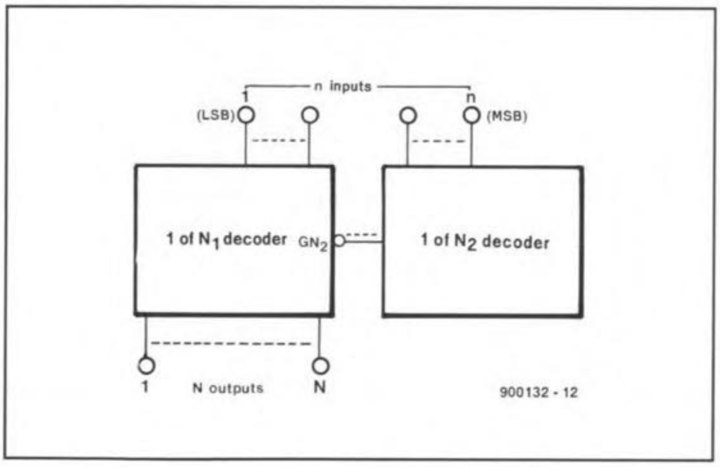

Figure 2

If, for example you want to build a 256-channel running lights unit, you will need sixteen 1-of-16 decoders, but it is also possible with just two 1-of-16 decoders as shown in Fig. 3.

A practical circuit a 32-channel running lights unit, which can also be used as a 'roulette wheel' is shown in Fig. 4. To use this as a running lights unit, jumpers K1 and K2 should be included, but not the components shown coonected by dashes lines. To use it as a 'roulette' wheel, jumpers K1 and K2 should be omitted and the components shown connected by dashes lines should be included. ■

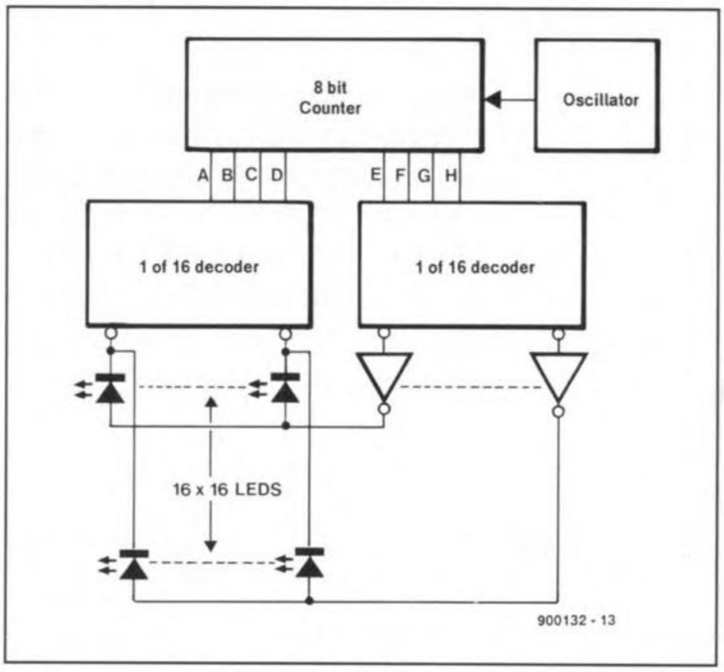

Figure 3

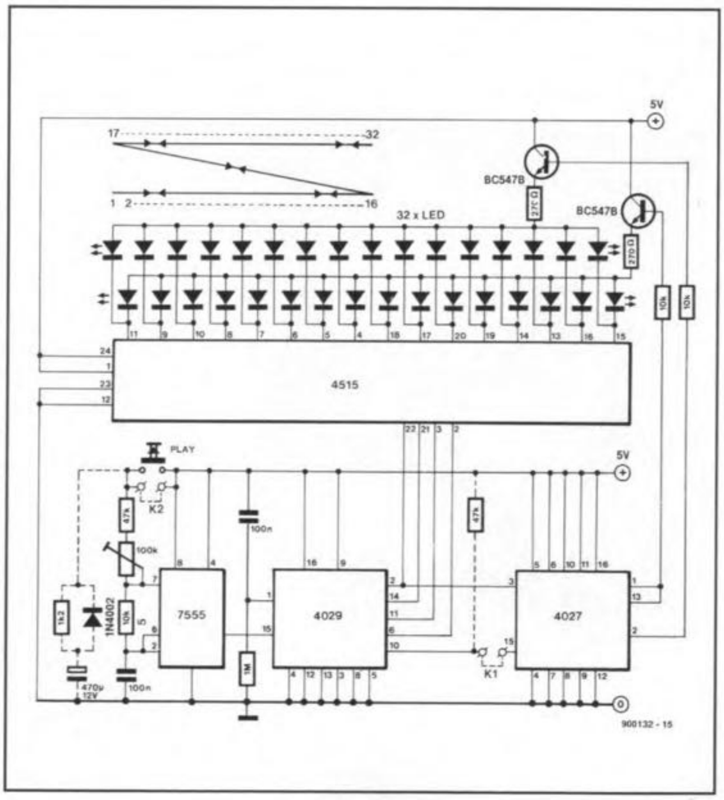

Figure 4

APPLICATION NOTES

The contents of this article are based on information obtained from manufacturers in the electrical and electronics industry and do not imply practical experience by *Elektor Electronics* or its consultants.

STEREO BRIDGE AMPLIFIER WITH TDA7370 (SGS-THOMSON)

Most car radio amplifier ICs designed for a supply voltage of 12 V have a maximum output power in the region of 10 watts. The production methods applied by SGS-Thomson for their TDA7370, however, allow the output power of this stereo bridge amplifier IC to be pushed very near the theoretical maximum of 22.5 watts. This level is reached at the cost of some distortion, but still without the use of a DC-to-DC step up converter.

The list of requirements that may be drawn up for car radio amplifier ICs is fairly long, and looks quite different from one that applies to an amplifier for use in, say, a hi-fi stereo set-up. The quiescent current, for one thing, should be as small as possible to avoid unnecessary draining of the car battery. Equally important is the requirement for switch-on and switch-off noises to be eliminated or suppressed to the extent that they are inaudible. Further, as most of you will be aware, the temperature conditions in a car are much more extreme than those in the living room. Hence, there is a clear requirement for a reliable temperature control circuit to take care of the protection of the amplifier IC when a thermal overload occurs as a result of a short-circuit, output overload or a too high ambient temperature.

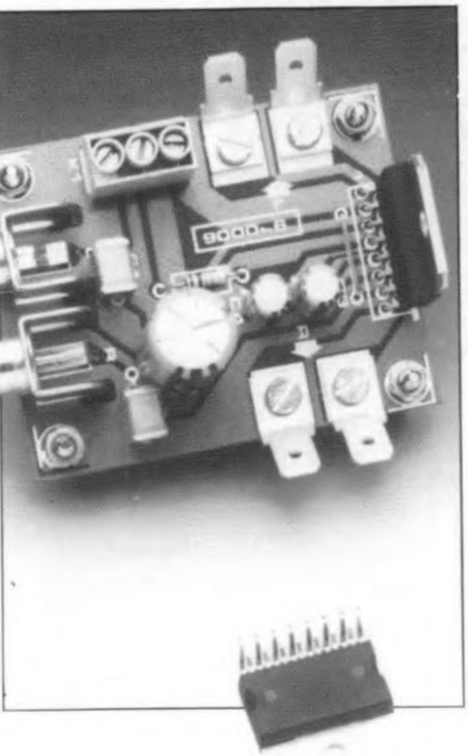

One of the most important characteristics of a car radio booster, irrespective whether built with discrete components or hybrid integrated circuits, is the saturation voltage of the power transistors. The smaller this voltage, the higher the maximum power that can be supplied to a load resistance. Assuming that the supply voltage is about 14 V, which holds true for a fully charged car battery, a single-ended power amplifier has a maximum theoretical output power of 5.6 W into 4 Ω, while 22.5 W could be supplied by a bridge amplifier. These power ratings are based on the assumption that the voltage drop across the output transistors is smaller than 0.3 V. This remarkably low value of the saturation voltage is actually achieved by the TDA7370, and compares favourably with the 1 V specification of older car amplifier ICs such as the TDA2003, TDA2004 and TDA2005, for which the respective single-ended and bridge output powers are 4.5 W and 18 W.

What's inside?

As shown in Fig. 1, the TDA7370 consists of four identical, independent, power amplifiers, a stand-by circuit, a clipping detector, and a number of protection circuits. Each of the power amplifiers has two integrated resistors which set the voltage gain to 26 dB (about 20 times). The input voltage required for full output power is about 720 mV. The gains of the amplifiers are matched to within 1 dB.

TDA 7370 MAIN SPECIFICATIONS

- **four power amplifiers in one IC**
- **very low external component count**
- **no bootstrap**
- **stand-by mode with soft-start**
- **on/off noise suppression**
- **protected against**
    - inductive loads
    - reversed supply
    - output short circuit
    - overheating
- **max. supply voltage: 18 V**
- **max. output current: 3.5 A**

The datasheet of the TDA7370 states a maximum output power of 17 W for the bridge arrangement of the four amplifiers. The distortion at this power is stated as 10%. At an output power of 10 W, the distortion drops to 0.03%, which is an excellent value for a car radio amplifier.

The stand-by circuit allows the IC to be switched on and off from a remote location with the aid of a control signal. The relevant IC pin is fitted with an external *R*-*C* network, and is taken to the positive supply voltage, $+U_b$, or to ground. When pin 7 is taken to $+U_b$, the four amplifiers are switched on a few seconds after applying the supply voltage. When pin 7 is not connected or taken to ground, the IC is switched to stand-by mode,

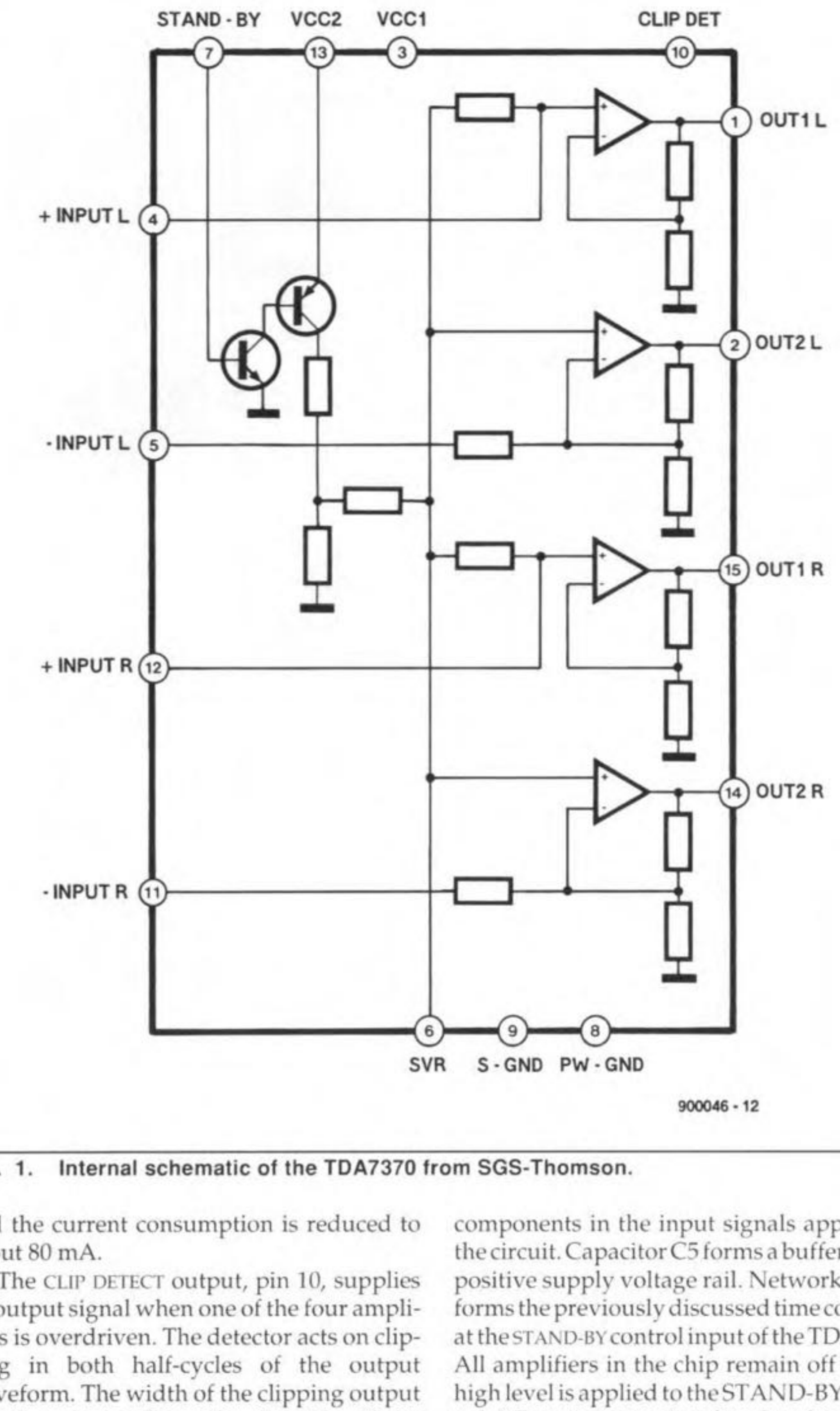

Fig. 1. Internal schematic of the TDA7370 from SGS-Thomson.

and the current consumption is reduced to about 80 mA.

The CLIP DETECT output, pin 10, supplies an output signal when one of the four amplifiers is overdriven. The detector acts on clipping in both half-cycles of the output waveform. The width of the clipping output signal corresponds to the duration of the overdrive condition.

The various short-circuit and overload protection circuits on board the TDA7370 are not shown in the circuit diagram. For the sake of completeness, the pinning of the IC is shown separately in Fig. 2.

Application circuit

The circuit diagram of a car radio booster based on the TDA7370 is shown in Fig. 3. Each loudspeaker is powered by two amplifiers in bridge configuration. In the absence of an input signal, all four outputs (pins 1 and 2, and pins 11 and 12) are at about half the supply voltage with respect to ground. This means that there is no voltage across the loudspeakers, so that electrolytic output capacitors are not required.

Capacitors C1 and C2 decouple any d.c. components in the input signals applied to the circuit. Capacitor C5 forms a buffer on the positive supply voltage rail. Network R1-C4 forms the previously discussed time constant at the STAND-BY control input of the TDA7370. All amplifiers in the chip remain off until a high level is applied to the STAND-BY terminal. When an input signal is already present while STAND-BY is made high, it will be noted that the volume rises gradually to the set level.

Construction

The printed-circuit board shown in Fig. 4 allows the metal tab of the TDA7370 to be bolted direct to a heat-sink. The completed board is best fitted into a metal enclosure made from a U-shaped and an L-shaped piece of aluminium. One side of this enclosure is formed by the heat-sink, which should be fairly large in view of the temperatures that can be expected in the car interior. The enclosure panel opposite the heat-sink is drilled to accept two phono sockets and a block of seven screw terminals, which are used to connect the loudspeakers, the supply voltage, and the stand-by control. If you do not want to use the stand-by control option, fit a wire link to connect the relevant input to the positive supply rail.

BACKGROUND THEORY

The theoretical maximum output power of a car radio amplifier is simple to calculate. To begin with, the peak loudspeaker voltage,

$$U_{LS(p)} = \tfrac{1}{2}U_b - U_{CEsat} = 7\ \text{V} - 0.3\ \text{V} = 6.7\ \text{V}$$

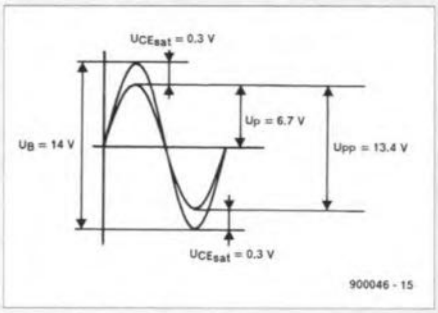

From this, the effective, or rms (root-mean square) voltage of a sine-wave is approximated by

$$U_{LS(rms)} = U_{LS(p)} / \sqrt{2} = 6.7\ \text{V} / 1.414 = 4.7\ \text{V}$$

The maximum output power that can be supplied to a 4-Ω load,

$$P_{(max)} = U_{LS(rms)}^2 / R_{LS} = 4.7^2 / 4 = 5.6\ \text{W}$$

For a bridge amplifier,

$$U_{LS(p)} = U_b - 2U_{CEsat} = 14\ \text{V} - 2 \times 0.3\ \text{V} = 13.4\ \text{V}$$

$$U_{LS(rms)} = U_{LS(p)} / \sqrt{2} = 13.4\ \text{V} / 1.414 = 9.5\ \text{V}$$

$$P_{(max)} = U_{LS(rms)}^2 / R_{LS} = 9.5^2 / 4 = 22.5\ \text{W}$$

Assuming a battery voltage of 14.4 V, and a saturation voltage of 1 V for each power transistor, a bridge amplifier has a theoretical maximum output power of just under 20 W into 4 Ω, or nearly 40 W into 2 Ω. Unfortunately, hardly any of the currently available car radio amplifier ICs reach this theoretical limit, mainly because they are unable to supply the required maximum current.

To calculate the maximum output power at a certain supply voltage, the above calculations may be avoided and replaced by the single equation

$$P_{(max)} = U_b^2 / 8R_{LS}$$

Other applications

There is, of course, no reason to limit yourself to the given application of a stereo amplifier.

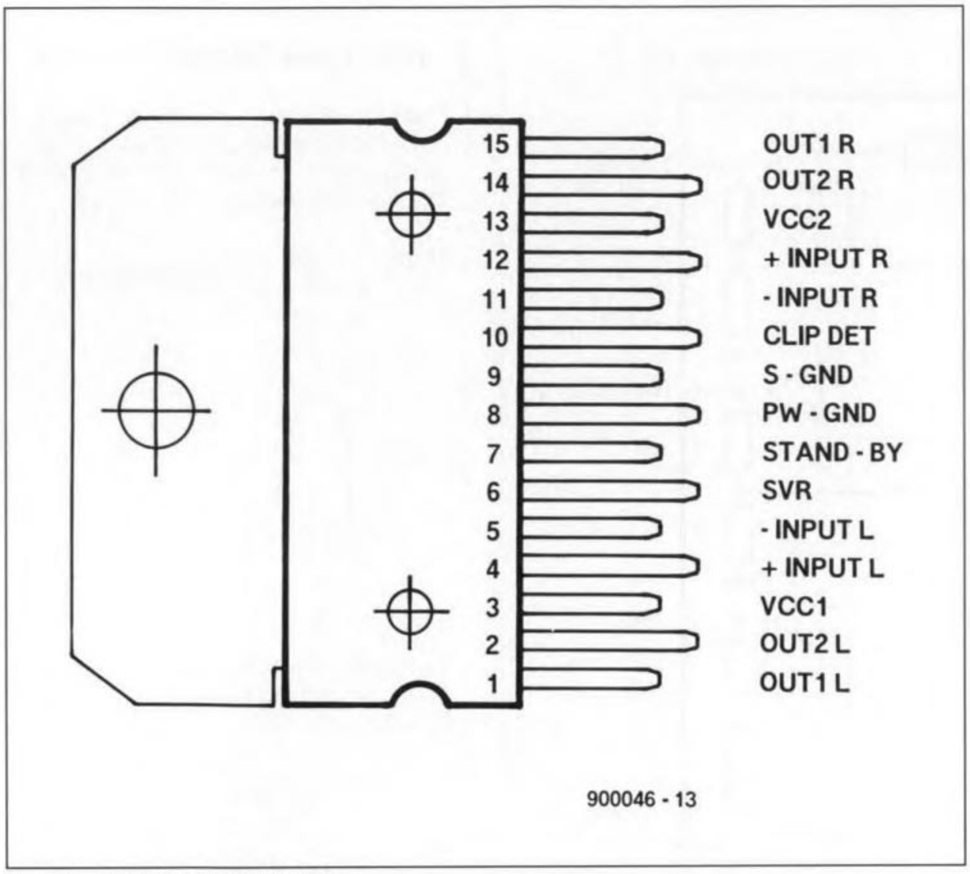

Fig. 2. Pinning of the TDA7370.

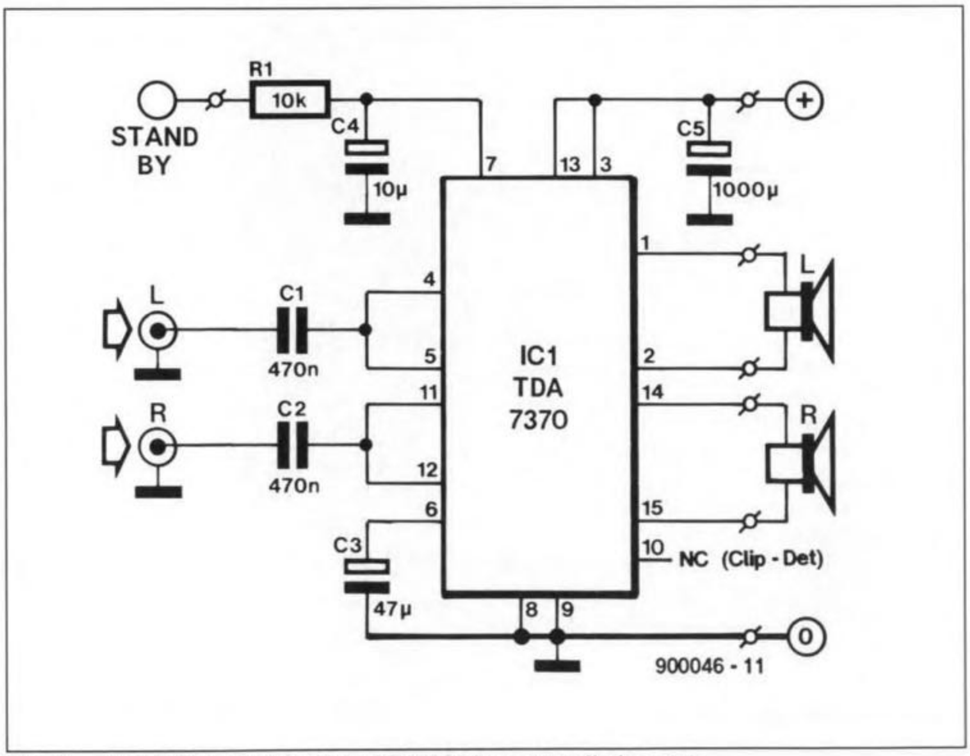

Fig. 3. Application circuit of the TDA7370 in a car radio booster.

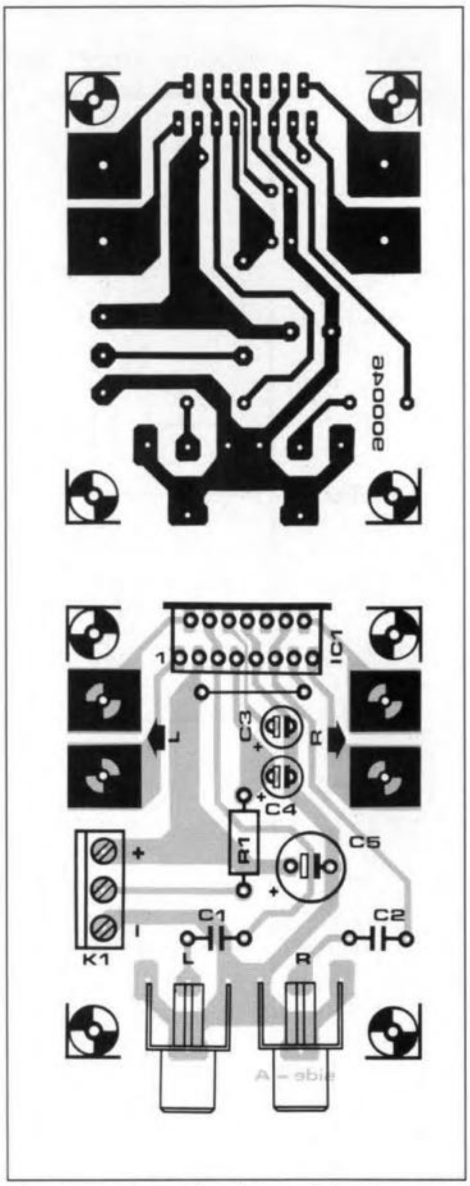

Fig. 4. Printed-circuit board for the stereo car radio amplifier based on the TDA7370.

COMPONENTS LIST

Resistors:

1	10kΩ	R1

Capacitors:

2	470nF	C1;C2
1	47µF 25V radial	C3
1	10µF 63V radial	C4
1	1000µF 35V radial	C5

Semiconductors:

1	TDA7370	IC1

Miscellaneous:

1	3-way PCB terminal block	K1
2	PCB-mount phono sockets	
4	car-type spade receptacles	
1	heat-sink 1 K/W	

The printed-circuit board is so small that two or more of them are easily fitted in the car. Combined with a simple filter, the amplifiers bring an active loudspeaker system in the car within easy reach.

The stand-by input on the amplifier may be used for automatic remote control when connected to the electric antenna output of the car radio.

The technical specifications of the TDA7370 give the IC a much wider application range than just in the car. Small hi-fi systems, portable public address (P.A.) equipment (megaphones), active loudspeakers and stage (monitor) loudspeakers are just a few examples of equipment where the TDA7370 can be used with advantage. ■

Note. The manufacturer of the TDA7370, SGS-Thomson, expects to start production of this device by December 1990.

SGS-Thomson Microelectronics • Planar House • Parkway • Globe Park • Marlow • Buckinghamshire. Telephone: (0628) 890800. Fax: (0628) 890391.

SGS-Thomson Microelectronics • North & South American Marketing Headquarters • 1000 East Bell Road • Phoenix, AZ 85022 • USA. Telephone: (602) 867-6100.

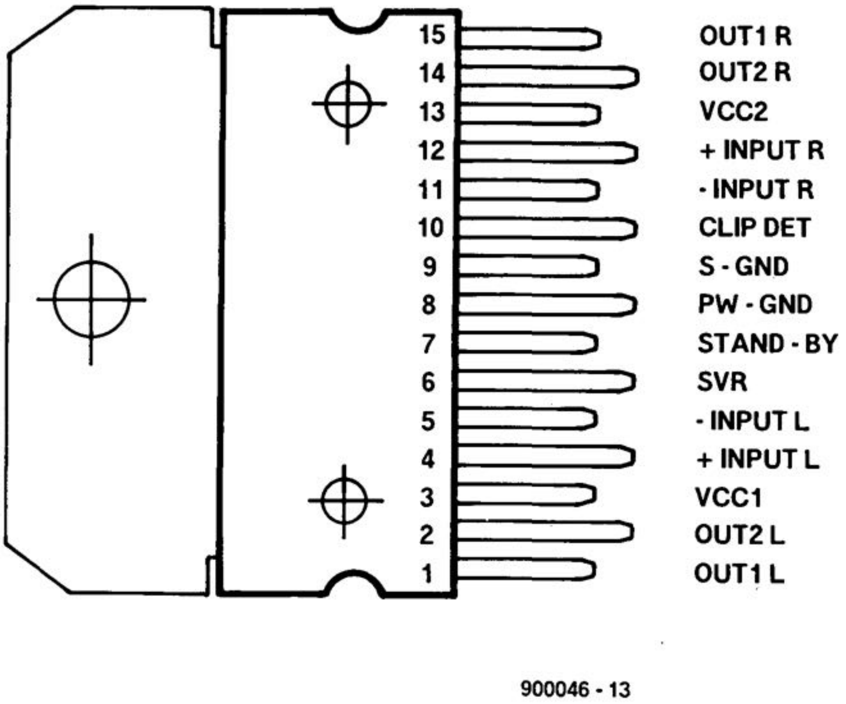

Fig. 2. Pinning of the TDA7370.

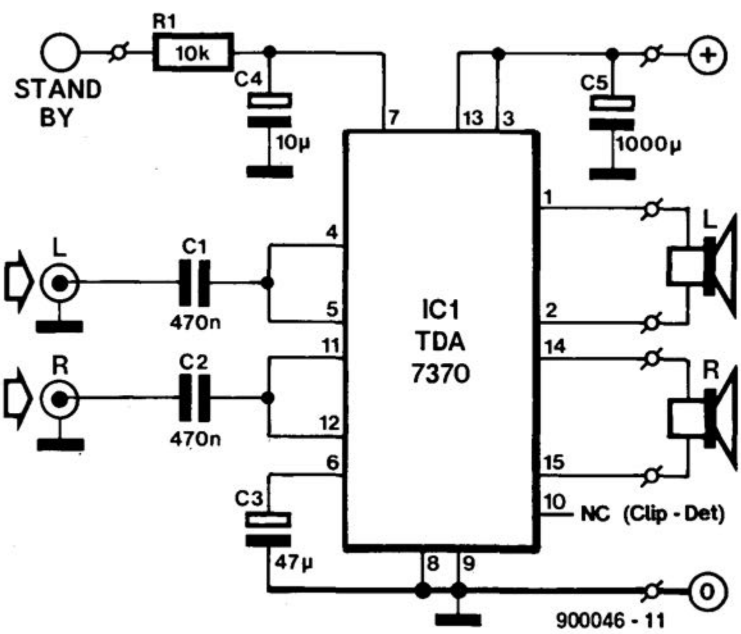

Fig. 3. Application circuit of the TDA7370 in a car radio booster.

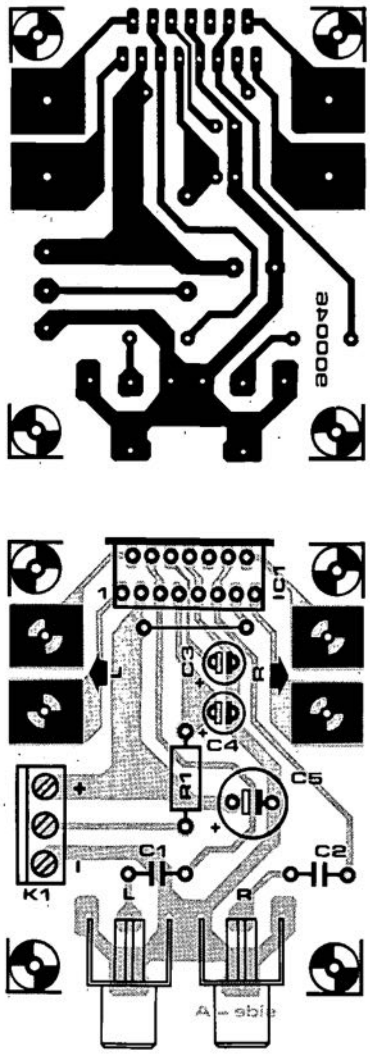

Fig. 4. Printed-circuit board for the stereo car radio amplifier based on the TDA7370.

COMPONENTS LIST

Resistors:		
1	10kΩ	R1
Capacitors:		
2	470nF	C1;C2
1	47µF 25V radial	C3
1	10µF 63V radial	C4
1	1000µF 35V radial	C5
Semiconductors:		
1	TDA7370	IC1
Miscellaneous:		
1	3-way PCB terminal block	K1
2	PCB-mount phono sockets	
4	car-type spade receptacles	
1	heat-sink 1 K/W	

The printed-circuit board is so small that two or more of them are easily fitted in the car. Combined with a simple filter, the amplifiers bring an active loudspeaker system in the car within easy reach.

The stand-by input on the amplifier may be used for automatic remote control when connected to the electric antenna output of the car radio.

The technical specifications of the TDA7370 give the IC a much wider application range than just in the car. Small hi-fi systems, portable public address (P.A.) equipment (megaphones), active loudspeakers and stage (monitor) loudspeakers are just a few examples of equipment where the TDA7370 can be used with advantage. ■

Note. The manufacturer of the TDA7370, SGS-Thomson, expects to start production of this device by December 1990.

SGS-Thomson Microelectronics • Planar House • Parkway • Globe Park • Marlow • Buckinghamshire. Telephone: (0628) 890800. Fax: (0628) 890391.

SGS-Thomson Microelectronics • North & South American Marketing Headquarters • 1000 East Bell Road • Phoenix, AZ 85022 • USA. Telephone: (602) 867-6100.